Pump Skid

presented by

FLUID INDUSTRIAL MANUFACTURING, INC.

EST. 1989

CHILLERMEN

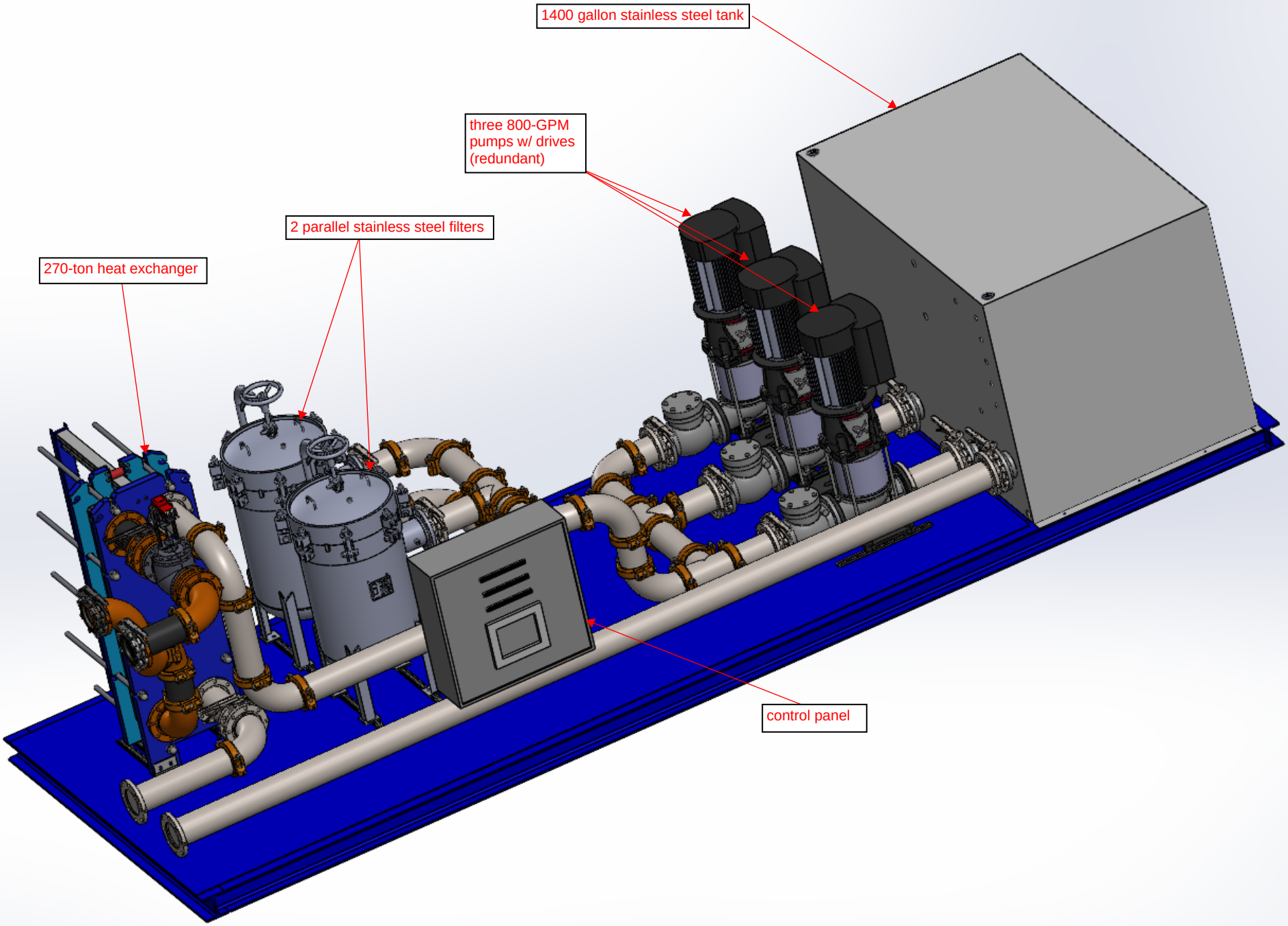
1400 gallon stainless steel tank
three 800-GPM pumps w/ drives (redundant)
2 parallel stainless steel filters
270-ton heat exchanger
control panel

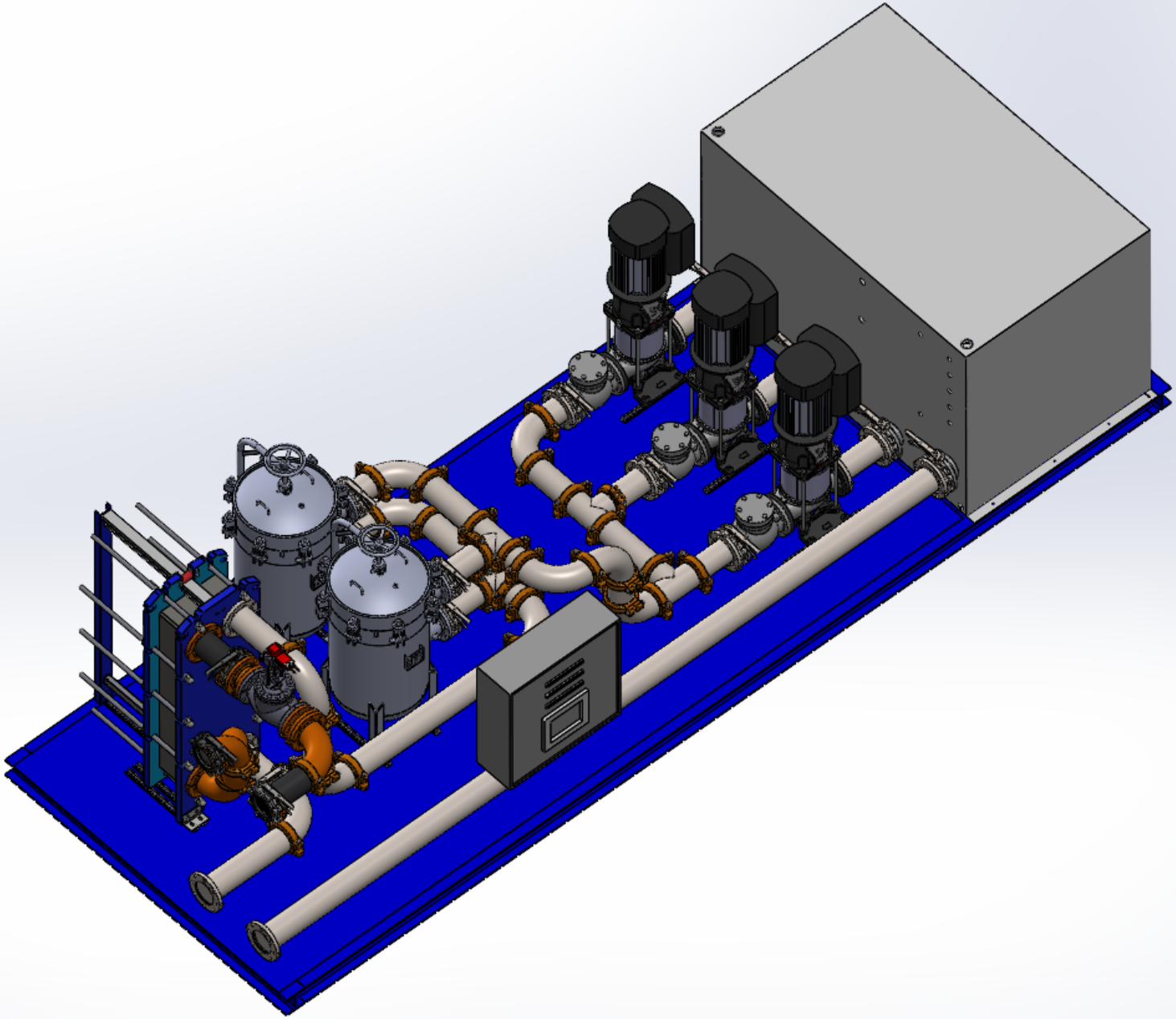

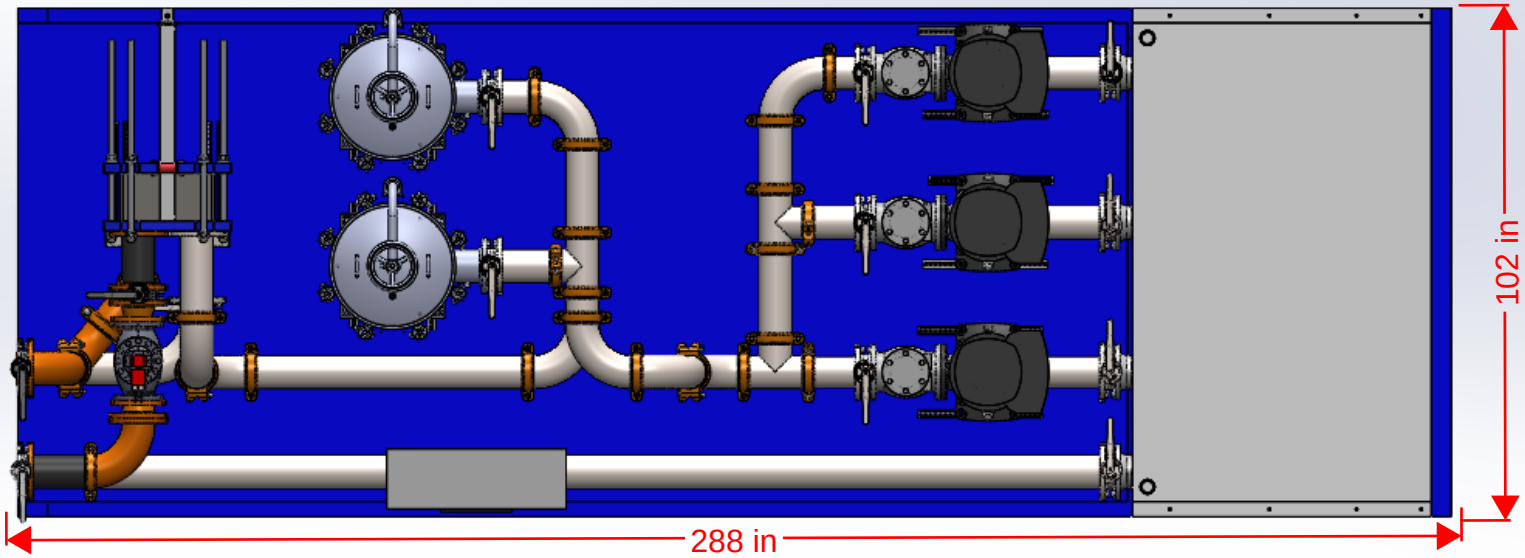
102 in
288 in

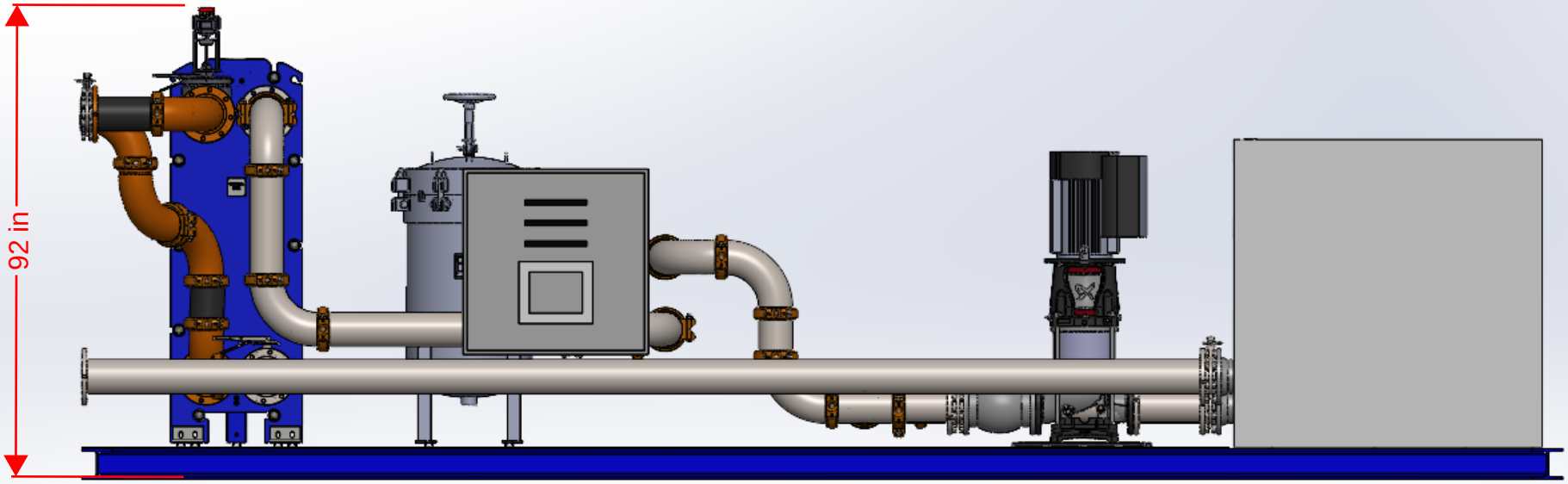
92 in

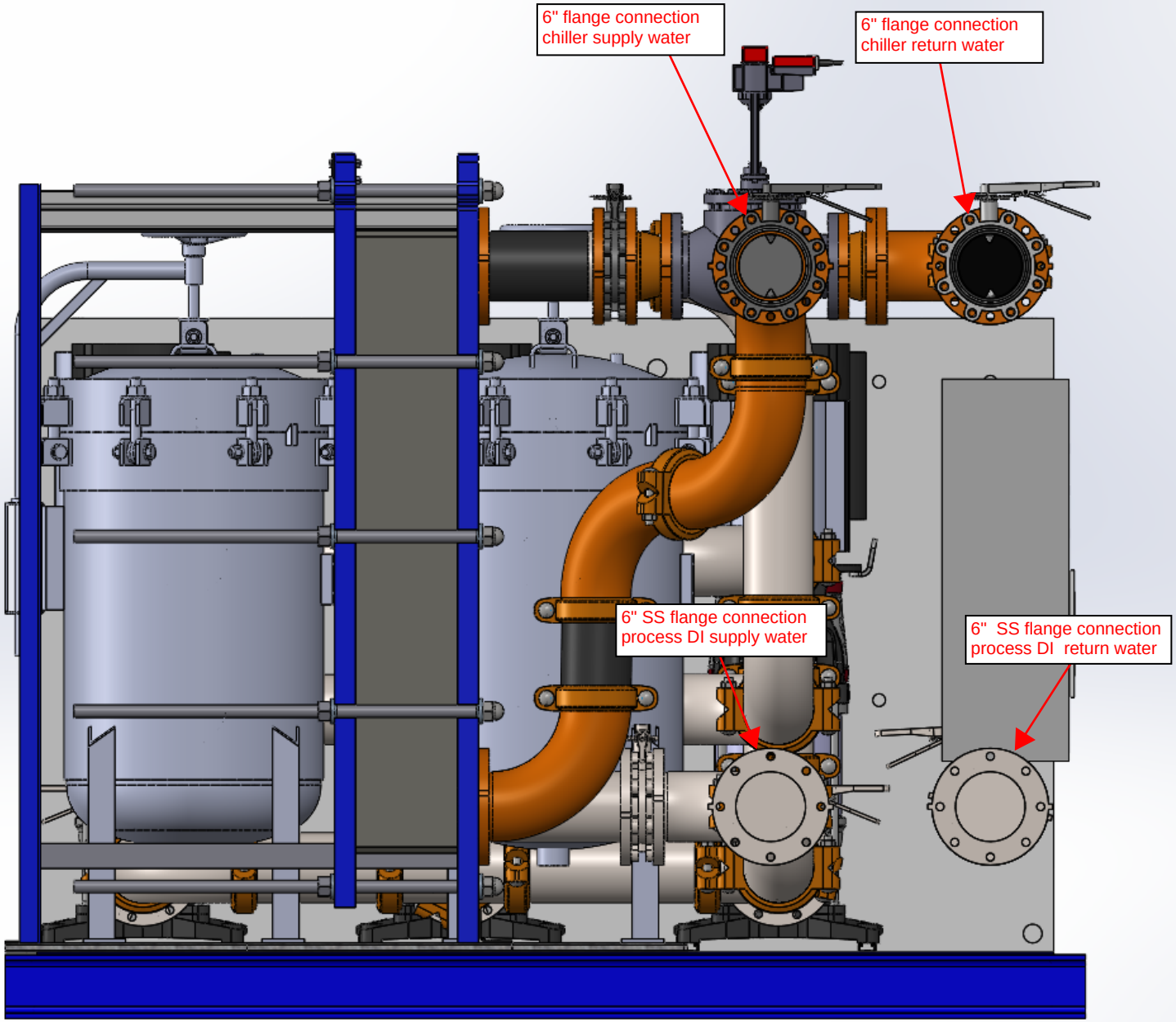
6" flange connection
chiller supply water
6" flange connection
chiller return water
6" SS flange connection
process DI supply water
6" SS flange connection
process DI return water

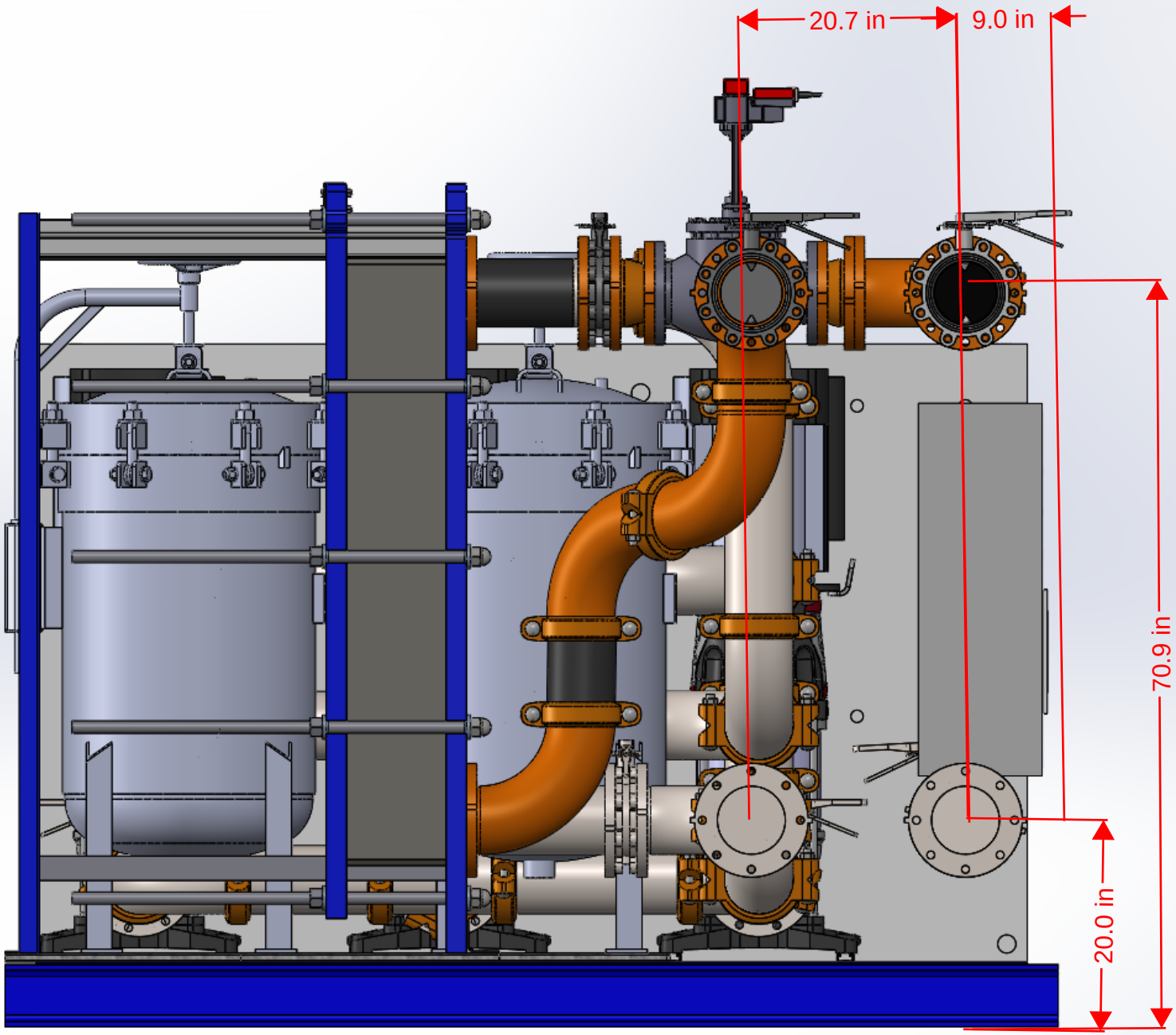
20.7 in
9.0 in
70.9 in
20.0 in

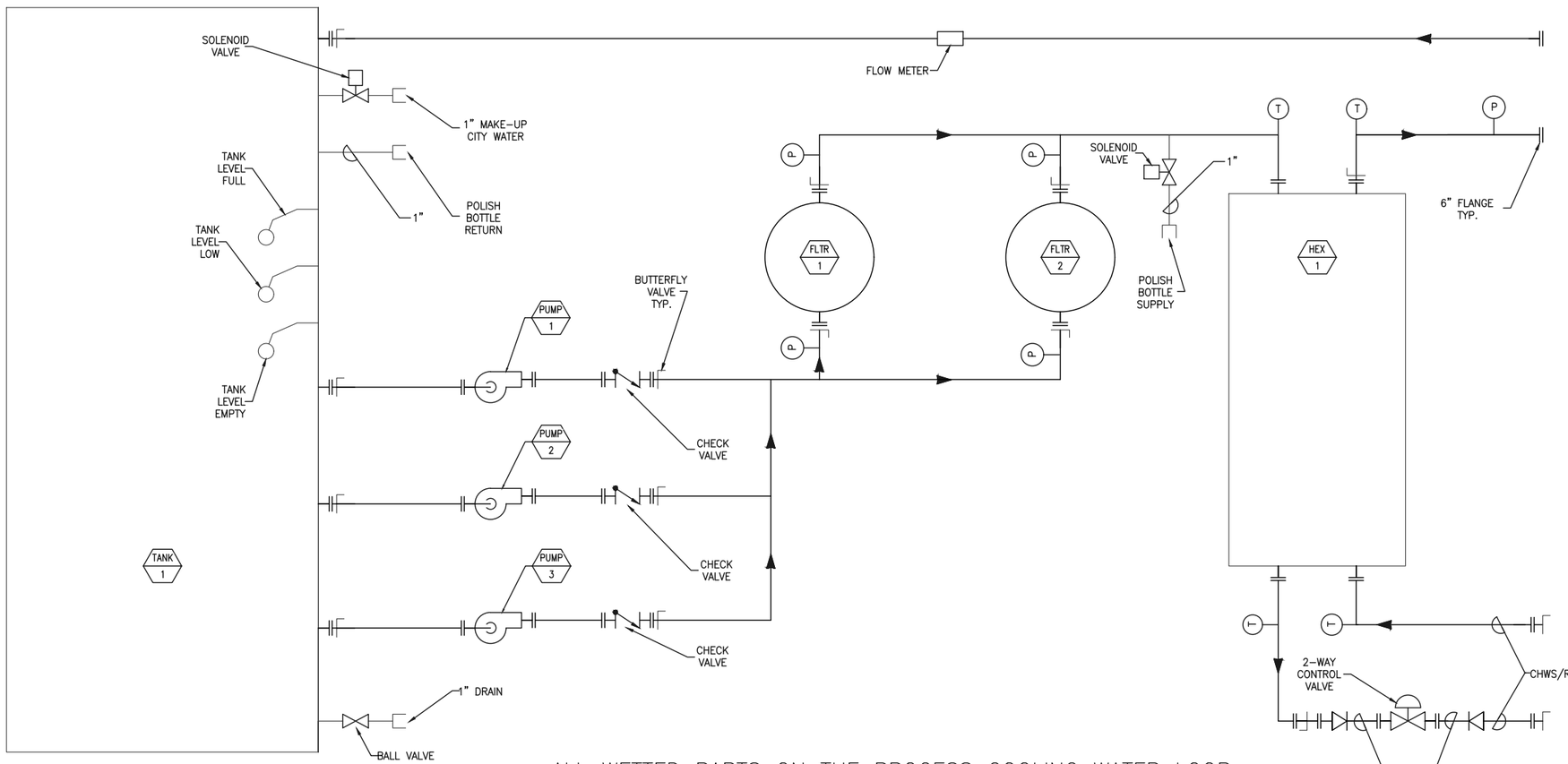

ALL WETTED PARTS ON THE PROCESS COOLING WATER LOOP
ARE 6" STAINLESS STEEL UNLESS OTHERWISE NOTED

REV.	DRAW BY	CHECK BY	DATE	COMMENT

fluid industrial manufacturing
340 S MILPITAS BLVD
MILPITAS CA 95035

QUALTECK

PIPING FLOW DIAGRAM

Date:	04.02.21
Checked by:	KK
Drawn by:	AH
Scale:	NTS
Sheet:	M1.1

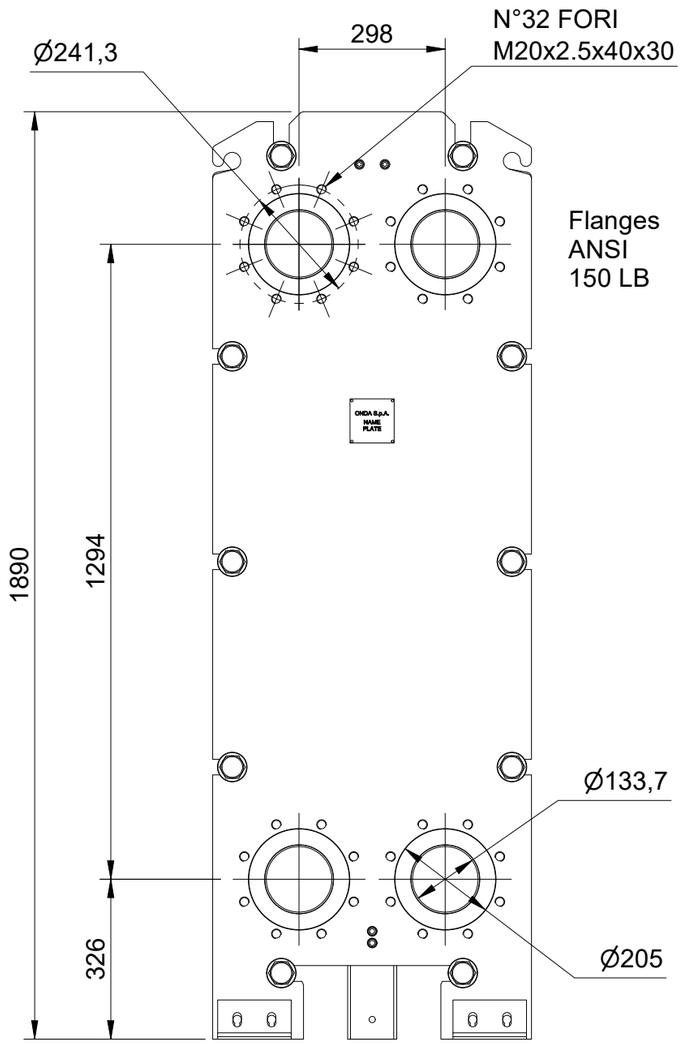

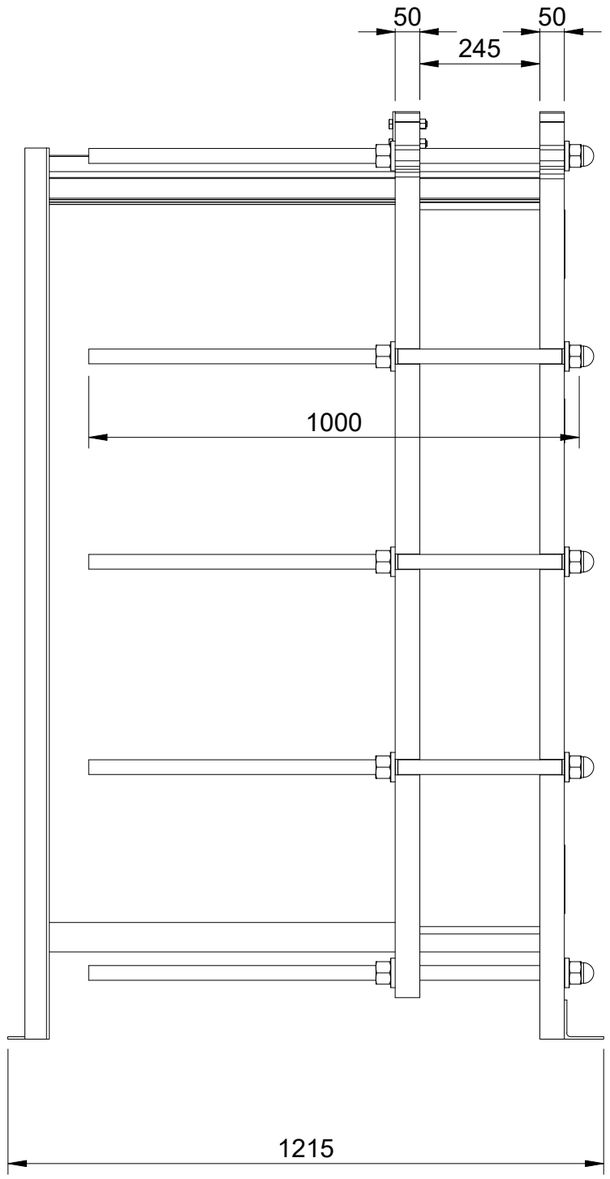

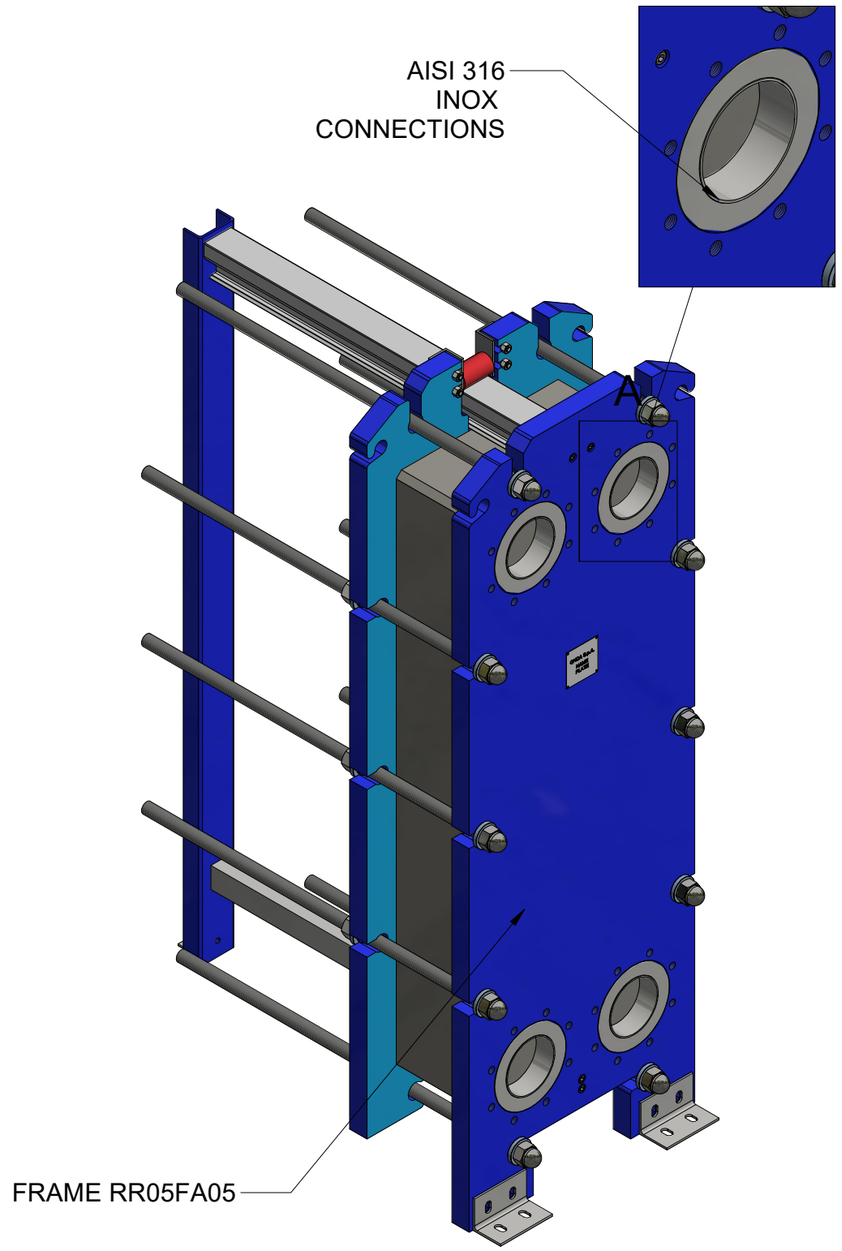

ONDA

MDO28_01

NOT SPECIFIED TOLERANCE ACCORDING TO:
UNI EN ISO 13920-BF

INDEX	DATE	TYPE OF MODIFICATION	DESIGNED	APPROVED

TITLE
GSK GT015 1P E 079 0-0-39 IX304X0.5 SX 1P L1000
ASME 150 COL.316

DESIGNED BY	DATE
E.G.	28/02/2020
APPROVED BY	DATE
Ferron A.	28/02/2020

CUSTOMER / DESIGN	COSTUMER/ DESIGN CODE	VOL. SHELL SIDE	VOL. TUBES SIDE	CUSTOMER ID
		0 L	0 L	

NAMEPLATE DESCRIPTION	WEIGHT	No SHEET	CODE ONDA
	N/A	1 /1	RJ015E079AAA

ONDA S.p.A. – Via Lord Baden Powell, 11 36045 LONIGO (VI) Italy
Tel. +39 – 0444 720 720 Fax +39 – 0444 720 721
C.F. P.IVA/IF NR IT 02065440246
Internet: www.onda-it.com E-Mail: onda@onda-it.com

ONDA Advanced Heat Exchangers

-

PLATE & FRAME HEAT EXCHANGERS 4/30/2021

model	GT015-89 0-0-44 AISI 304 PN10 NBR countercurrent	
number of plate	89	
total required duty	4200	kBtu/h
duty margin	104.1	%

side 1 (W)

number of channels	44	

Water (liquid)

flow rate	800	gpm
inlet temperature	70.63	°F
outlet temperature	60	°F
fluid pressure drop	8.1	psi

side 2 (F)

number of channels	44	

Water (liquid)

flow rate	558.06	gpm
inlet temperature	42	°F
outlet temperature	57	°F
fluid pressure drop	4.4	psi

surface	681.60	ft²
front dimensions LxH	25 5/8 x 74 3/8	inch
tightening measure	10.86	inch
weight	2622.95	lb

INFO: Side 1 IN/OUT nozzles: DN 150; Side 2 IN/OUT nozzles: DN 150
Side W nozzle velocity: IN 8.21 ft/s; OUT 8.21 ft/s; Side F nozzle velocity: IN 5.72 ft/s; OUT 5.72 ft/s
Gasket material: NBR

date: 4/30/2021 1:24:18 PM

Onda HTC-PFRAME v. 2.1 Rel. 0 - PLATE & FRAME HEAT EXCHANGERS

ONDA S.p.A. – Via Lord Baden Powell, 11 36045 LONIGO (VI) Italy
Tel. +39 – 0444 720 720 Fax +39 – 0444 720 721
C.F. P.IVA/IF NR IT 02065440246
Internet: www.onda-it.com E-Mail: onda@onda-it.com

ONDA Advanced Heat Exchangers

PLATE & FRAME HEAT EXCHANGERS 4/30/2021

model GT015-89 0-0-44 AISI 304 PN10 NBR

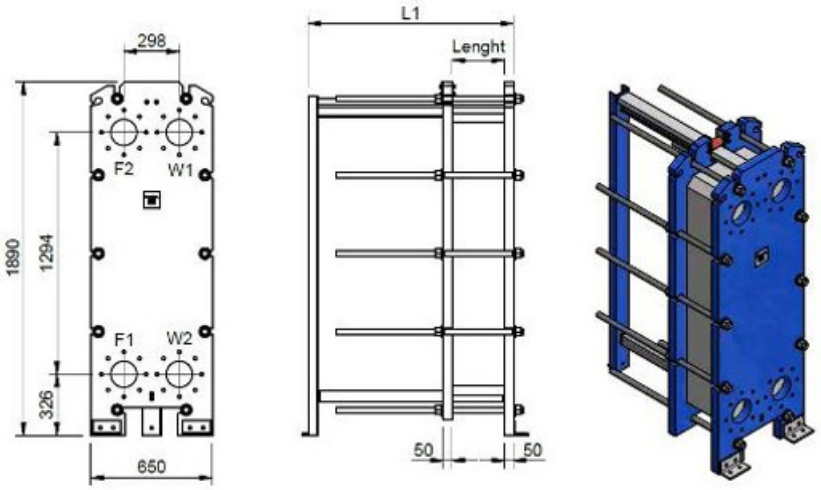

L1									
N° plate	0-25	26-50	51-75	76-100	101-150	151-200	201-250	251-300	301-350
GT015 (3,1)	1000	1000	1000	1000	1000	1500	1500	1500	2000

F1 (inlet) =	DN 150		F2 (outlet) =	DN 150	
W1 (inlet) =	DN 150		W2 (outlet) =	DN 150	
Side 1 volume	2.41	ft³	Side 2 volume	2.41	ft³
tightening measure =	10.86	inch	weight =	2622.95	lb

date: 4/30/2021 1:24:18 PM

Onda HTC-PFRAME v. 2.1 Rel. 0 - PLATE & FRAME HEAT EXCHANGERS

FlowCon international
A Griswold Controls LLC./FlowCon International Company

FlowCon SM 50-250mm

Pressure Independent Control Valve

SPECIFICATIONS

Pressure rating:	4000 kPa / 580 psi
Temperature rating, media:	-20°C to +120°C / -4°F to +248°F
Temperature rating, ambient:	-10°C to +50°C / +14°F to +122°F
Material:	
- Diaphragm:	Hydrogenated acrylonitrile-butadiene-rubber
- Body:	Ductile iron ASTM A395 Grade 60-40-18
- O-rings:	EPDM
- Internal metal components:	Stainless steel
End connection:	Universal flange connections which can be used with both ISO and ANSI Flanges and mounting kits are not supplied by FlowCon
Body tappings:	1/4” ISO
Maximum close off pressure:	700 kPa / 100 psi
Maximum operational ΔP:	600 kPaD / 87 psid
Maximum allowable operating pressure:	1600 kPad / 232 psid
Shut-off leakage:	ANSI / FCI 70-2 2006 / IEC 60534-4 - Class IV
Flow rate range:	1.48-76.8 l/sec / 23.4-1220 GPM

DIMENSIONS AND WEIGHTS (NOMINAL) (measured in mm unless noted)

Model no.	Valve size	L	H1	H2	Weight[1] (kgs.)
SM.3.X	50	224	252	95	14.0
	65				
	80				
SM.4.X	80	320	292	135	31.0
	100				32.0 (SM.4.3)
SM.5.X	125	422	343	180	61.0
	150				
SM.6.2	200	725	472	292	248.0
	250				

PCW-Hx: 426gpm

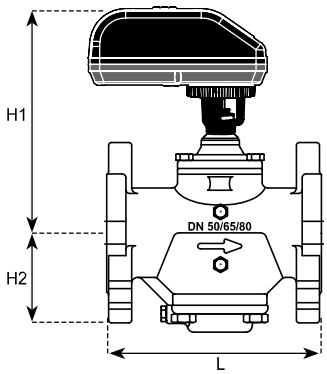

Note 1: Weight includes valve and actuator.

MODEL NUMBER SELECTION[2]

PCW-Hx: 426gpm

SM . 5 . 2 . **B** . 6

Insert valve body size:
3=50-80mm, 2"-3" **4**=80-100mm, 3"-4" **5**=125-150mm, 5"-6" **6**=200-250mm, 8"-10"

Insert dP control range:
0=30-600 kPaD, 4.5-87 psid (SM.3 only)
1=30-600 kPaD, 4.5-87 psid
2=35-600 kPaD, 5.1-87 psid
3=50-600 kPaD, 7.3-87 psid (SM.4 only)

Insert p/t plug requirements:
B=p/t plugs (standard)

Insert actuator selection:
3=display (SM.0.0.0.3) **4**=display and failsafe (SM.0.0.0.4) **5**=display and BACnet (SM.0.0.0.5) **6**=display, BACnet and failsafe (SM.0.0.0.6)

Example: SM.3.1.B.4=SM 2"-3" body for 30-600 kPaD with p/t plugs and failsafe actuator.

Note 2: Model no. and pressure range are indicated on label affixed to body.

ACTUATOR SPECIFICATIONS[3]

FlowCon SM.0.0.0.3, SM.0.0.0.4,
SM.0.0.0.5 (with BACnet) and SM.0.0.0.6 (with BACnet) actuators

Supply voltage:	24V AC/DC
Power consumption:	12VA
Frequency:	50/60 HZ
Control input:	0-10V DC, 2-10V DC, 0-20mA, 4-20mA, 2-position or 3-point floating
Feedback position output:	Automatic match of control input, 0-10V DC, 2-10V DC or 4-20mA
Turn time:	190 seconds (from closed to fully open valve)
Electrical connection:	5 wires 22 AWG halogen free cable, 1 meter For BACnet versions another 3 wires 22 AWG halogen free cable, 1 meter
Direction of rotation:	Bi-directional
Humidity rating:	5 to 95% RH non condensing
Housing material:	UL94 V0-rated plastic
Housing insulation:	IP54 including up-side-down mounting
Programming:	External programming of all settings, interface of buttons and display
Calibration:	Automatic calibration at startup
Valve - actuator coupling:	Easy snap coupling
BACnet device profile:	BACnet Application Specific Controller (B-ASC) type server
BACnet protocol:	BACnet Master Slave/Token passing (MS/TP)
BACnet baud rates supported:	9600, 19200, 38400 and 76800
BACnet services (BIBBS) supported:	DS-RP-B, DS-WP-B, DM-DDB-B, DM-DOB-B and DM-DCC-B.

Note 3: FlowCon warranty is voided using other actuators than supplied or recommended by FlowCon International.

FLOW RATE TABLE

Model no.	Valve size		Control range		Minimum setting			Maximum setting		
	mm	inch	kPaD	psid	l/sec	l/hr	GPM	l/sec	l/hr	GPM
SM.3.0	50	2”	30-600	4.5-87	1.48	5310	23.4	4.16	15000	65.9
	65	2 1/2”								
	80	3”								
SM.3.1	50	2”	30-600	4.5-87	2.57	9240	40.7	7.15	25700	113
	65	2 1/2”								
	80	3”								
SM.3.2	50	2”	35-600	5.1-87	3.55	12800	56.3	9.89	35600	157
	65	2 1/2”								
	80	3”								
SM.4.1	80	3”	30-600	4.5-87	3.49	12600	55.4	9.38	33800	149
	100	4”								
SM.4.2	80	3”	35-600	5.1-87	4.73	17000	75.0	14.2	51000	225
	100	4”								
SM.4.3	80	3”	50-600	7.3-87	3.68	13300	58.3	20.2	72700	320
	100	4”								
SM.5.1	125	5”	30-600	4.5-87	6.48	23300	103	23.3	83800	369
	150	6”								
SM.5.2	125	5”	35-600	5.1-87	7.10	25600	113	29.5	106000	468
	150	6”								
SM.6.2	200	8"	35-600	5.1-87	9.21	33100	146	76.8	277000	1220
	250	10"								

PCW-Hx: 426gpm

Accuracy: Greatest of either ±5% of controlled flow rate or ±2% of maximum flow rate.

CONTROL CURVE AT MAXIMUM PRE-SETTING[4]

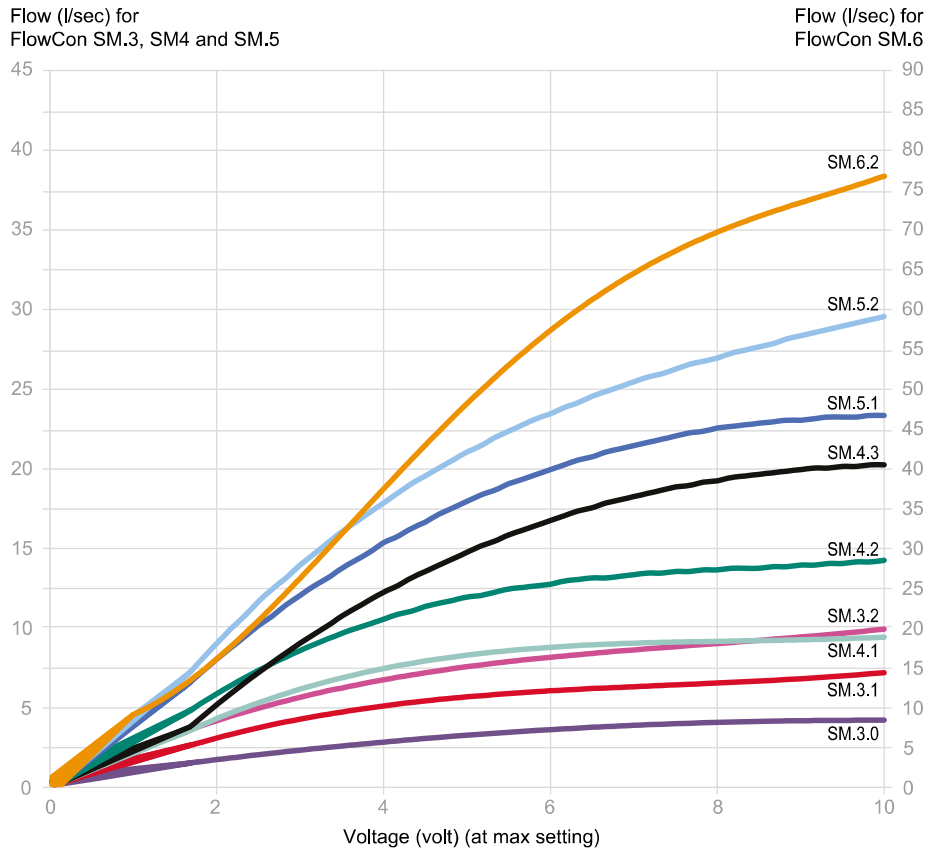

Note 4: Above curves show the control curve of the valves in maximum allowed pre-setting condition and may vary if lower pre-settings are selected. The valves will always have 1000 positions between the pre-set flow value and 0V if control range is selected to 0-10V.

FLOW RATE SETTING[5] - VALVE SIZE DN50-DN100

Maximum Flow Rate								
Valve size: DN50-DN80 · 2”-3”								
30-600 kPaD 4.5-87 psid			30-600 kPaD 4.5-87 psid			35-600 kPaD 5.1-87 psid		
SM.3.0			**SM.3.1**			**SM.3.2**		
l/sec	l/hr	GPM	l/sec	l/hr	GPM	l/sec	l/hr	GPM
1.48	5310	23.4	2.57	9240	40.7	3.55	12800	56.3
1.58	5700	25.1	2.81	10100	44.6	3.85	13900	61.0
1.69	6080	26.8	3.05	11000	48.3	4.13	14900	65.5
1.79	6460	28.4	3.27	11800	51.9	4.41	15900	69.9
1.90	6830	30.1	3.49	12500	55.2	4.67	16800	74.0
2.00	7190	31.6	3.69	13300	58.4	4.92	17700	78.0
2.09	7540	33.2	3.88	14000	61.5	5.16	18600	81.7
2.19	7880	34.7	4.06	14600	64.3	5.38	19400	85.3
2.28	8220	36.2	4.23	15200	67.0	5.60	20200	88.8
2.37	8540	37.6	4.39	15800	69.6	5.81	20900	92.1
2.46	8860	39.0	4.54	16300	72.0	6.01	21600	95.2
2.55	9170	40.4	4.68	16900	74.2	6.19	22300	98.2
2.63	9470	41.7	4.82	17300	76.4	6.37	22900	101
2.71	9770	43.0	4.94	17800	78.4	6.54	23600	104
2.79	10100	44.3	5.06	18200	80.2	6.71	24100	106
2.87	10300	45.5	5.17	18600	82.0	6.86	24700	109
2.95	10600	46.7	5.28	19000	83.7	7.00	25200	111
3.02	10900	47.8	5.38	19400	85.2	7.14	25700	113
3.09	11100	49.0	5.47	19700	86.6	7.28	26200	115
3.16	11400	50.0	5.55	20000	88.0	7.40	26600	117
3.22	11600	51.1	5.63	20300	89.2	7.52	27100	119
3.29	11800	52.1	5.70	20500	90.4	7.63	27500	121
3.35	12000	53.1	5.77	20800	91.5	7.74	27900	123
3.41	12300	54.0	5.84	21000	92.5	7.84	28200	124
3.46	12500	54.9	5.90	21200	93.5	7.94	28600	126
3.52	12700	55.8	5.96	21400	94.4	8.03	28900	127
3.57	12900	56.6	6.01	21600	95.2	8.12	29200	129
3.62	13000	57.4	6.06	21800	96.0	8.20	29500	130
3.67	13200	58.2	6.10	22000	96.8	8.28	29800	131
3.72	13400	58.9	6.15	22100	97.5	8.36	30100	133
3.76	13500	59.6	6.19	22300	98.2	8.44	30400	134
3.80	13700	60.2	6.23	22400	98.8	8.51	30600	135
3.84	13800	60.9	6.27	22600	99.4	8.58	30900	136
3.88	14000	61.4	6.31	22700	101	8.65	31100	137
3.91	14100	62.0	6.35	22900	101	8.72	31400	138
3.94	14200	62.5	6.39	23000	101	8.78	31600	139
3.97	14300	63.0	6.42	23100	102	8.85	31900	140
4.00	14400	63.4	6.46	23300	102	8.91	32100	141
4.03	14500	63.8	6.50	23400	103	8.98	32300	142
4.05	14600	64.2	6.54	23500	104	9.04	32600	143
4.07	14700	64.5	6.58	23700	104	9.11	32800	144
4.09	14700	64.8	6.62	23800	105	9.18	33000	145
4.11	14800	65.1	6.67	24000	106	9.25	33300	147
4.12	14800	65.3	6.72	24200	106	9.32	33500	148
4.13	14900	65.5	6.77	24400	107	9.39	33800	149
4.14	14900	65.7	6.82	24600	108	9.46	34100	150
4.15	14900	65.8	6.88	24800	109	9.54	34300	151
4.16	15000	65.9	6.94	25000	110	9.62	34600	153
4.16	15000	65.9	7.01	25200	111	9.71	34900	154
4.16	15000	65.9	7.08	25500	112	9.79	35300	155
4.16	15000	65.9	7.15	25700	113	9.89	35600	157

Maximum Flow Rate								
Valve size: DN80 and DN100 · 3”-4”								
30-600 kPaD 4.5-87 psid			35-600 kPaD 5.1-87 psid			50-600 kPaD 7.3-87 psid		
SM.4.1			**SM.4.2**			**SM.4.3**		
l/sec	l/hr	GPM	l/sec	l/hr	GPM	l/sec	l/hr	GPM
3.49	12600	55.4	4.73	17000	75.0	3.68	13300	58.3
3.88	14000	61.6	5.29	19000	83.8	4.42	15900	70.0
4.26	15300	67.5	5.82	21000	92.3	5.13	18500	81.3
4.61	16600	73.0	6.33	22800	100	5.82	21000	92.3
4.94	17800	78.4	6.82	24500	108	6.50	23400	103
5.26	18900	83.4	7.28	26200	115	7.15	25700	113
5.56	20000	88.1	7.72	27800	122	7.78	28000	123
5.84	21000	92.6	8.14	29300	129	8.40	30200	133
6.11	22000	96.9	8.54	30700	135	8.99	32400	142
6.36	22900	101	8.91	32100	141	9.57	34400	152
6.60	23800	105	9.27	33400	147	10.1	36400	160
6.82	24600	108	9.61	34600	152	10.7	38400	169
7.03	25300	111	9.93	35700	157	11.2	40200	177
7.23	26000	115	10.2	36800	162	11.7	42100	185
7.41	26700	117	10.5	37800	167	12.2	43800	193
7.58	27300	120	10.8	38800	171	12.6	45500	200
7.73	27800	123	11.0	39700	175	13.1	47100	207
7.88	28400	125	11.3	40500	178	13.5	48700	214
8.01	28800	127	11.5	41300	182	13.9	50200	221
8.14	29300	129	11.7	42000	185	14.3	51600	227
8.25	29700	131	11.9	42700	188	14.7	53000	233
8.35	30100	132	12.0	43400	191	15.1	54300	239
8.45	30400	134	12.2	43900	194	15.4	55600	245
8.53	30700	135	12.4	44500	196	15.8	56800	250
8.61	31000	137	12.5	45000	198	16.1	58000	255
8.68	31300	138	12.6	45500	200	16.4	59100	260
8.75	31500	139	12.7	45900	202	16.7	60200	265
8.80	31700	140	12.9	46300	204	17.0	61200	269
8.85	31900	140	13.0	46700	205	17.3	62100	274
8.90	32000	141	13.1	47000	207	17.5	63000	278
8.94	32200	142	13.1	47300	208	17.8	63900	281
8.97	32300	142	13.2	47600	209	18.0	64700	285
9.00	32400	143	13.3	47800	210	18.2	65500	288
9.03	32500	143	13.4	48100	212	18.4	66200	292
9.05	32600	143	13.4	48300	213	18.6	66900	295
9.07	32600	144	13.5	48500	214	18.8	67600	297
9.09	32700	144	13.5	48700	214	18.9	68200	300
9.10	32800	144	13.6	48800	215	19.1	68700	303
9.12	32800	145	13.6	49000	216	19.2	69200	305
9.13	32900	145	13.7	49200	217	19.4	69700	307
9.15	32900	145	13.7	49300	217	19.5	70200	309
9.16	33000	145	13.7	49500	218	19.6	70600	311
9.18	33000	145	13.8	49600	218	19.7	70900	312
9.19	33100	146	13.8	49800	219	19.8	71300	314
9.21	33200	146	13.9	49900	220	19.9	71600	315
9.23	33200	146	13.9	50100	220	20.0	71900	316
9.25	33300	147	14.0	50200	221	20.0	72100	317
9.28	33400	147	14.0	50400	222	20.1	72300	318
9.31	33500	148	14.1	50600	223	20.1	72500	319
9.34	33600	148	14.1	50800	224	20.2	72600	320
9.38	33800	149	14.2	51000	225	20.2	72700	320

Accuracy: Greatest of either ±5% of controlled flow rate or ±2% of maximum flow rate.

Note 5: Above values are related to maximum flow rate setting of the valve and thereby defining the flow through the valve at maximum control signal, normally 10V. Values above do not relate to control signals below 10V. All above valves will have 1000 positions between the pre-set flow value and 0V if control range is selected to 0-10V.

FlowCon International recommends that the SM PICV valves are selected to ensure that the set maximum flow rates are minimum 50% of the rated valve maximum capacity.

FLOW RATE SETTING[6] - VALVE SIZE DN125-DN250

Maximum Flow Rate					
Valve size: DN125 and DN150 · 5"-6"					
30-600 kPaD 4.5-87 psid			35-600 kPaD 5.1-87 psid		
SM.5.1			SM.5.2		
l/sec	l/hr	GPM	l/sec	l/hr	GPM
6.48	23300	103	7.10	25600	113
7.24	26100	115	8.06	29000	128
7.98	28700	126	8.98	32300	142
8.70	31300	138	9.87	35500	157
9.39	33800	149	10.7	38600	170
10.1	36200	160	11.6	41600	183
10.7	38600	170	12.4	44500	196
11.4	40900	180	13.1	47300	208
12.0	43100	190	13.9	50000	220
12.6	45200	199	14.6	52600	232
13.1	47300	208	15.3	55100	243
13.7	49300	217	16.0	57500	253
14.2	51200	226	16.6	59800	264
14.8	53100	234	17.2	62100	273
15.3	54900	242	17.8	64200	283
15.7	56600	249	18.4	66300	292
16.2	58300	257	19.0	68300	301
16.6	59900	264	19.5	70200	309
17.1	61500	271	20.0	72100	317
17.5	63000	277	20.5	73800	325
17.9	64400	284	21.0	75500	333
18.3	65800	290	21.4	77200	340
18.6	67100	295	21.9	78700	347
19.0	68300	301	22.3	80200	353
19.3	69500	306	22.7	81700	360
19.6	70700	311	23.1	83100	366
19.9	71700	316	23.4	84400	372
20.2	72800	320	23.8	85700	377
20.5	73800	325	24.1	86900	383
20.7	74700	329	24.5	88100	388
21.0	75600	333	24.8	89200	393
21.2	76400	336	25.1	90300	398
21.4	77200	340	25.4	91400	402
21.6	77900	343	25.7	92400	407
21.8	78600	346	25.9	93400	411
22.0	79200	349	26.2	94300	415
22.2	79800	351	26.5	95200	419
22.3	80300	354	26.7	96100	423
22.5	80800	356	26.9	97000	427
22.6	81300	358	27.2	97800	431
22.7	81700	360	27.4	98600	434
22.8	82100	361	27.6	99400	438
22.9	82400	363	27.8	100000	441
23.0	82700	364	28.1	101000	445
23.0	83000	365	28.3	102000	448
23.1	83200	366	28.5	102000	451
23.2	83400	367	28.7	103000	455
23.2	83500	368	28.9	104000	458
23.2	83600	368	29.1	105000	461
23.3	83700	369	29.3	105000	464
23.3	83800	369	29.5	106000	468

PCW-Hx: 426 gpm

Maximum Flow Rate					
Valve size: DN200 and DN250 · 8"-10"					
35-600 kPaD 5.1-87 psid					
SM.6.2					
l/sec	l/hr	GPM	l/sec	l/hr	GPM
9.21	33100	146	57.5	207000	911
9.69	34900	154	58.3	210000	924
10.2	36800	162	59.1	213000	936
10.8	38900	171	59.8	215000	948
11.5	41200	182	60.6	218000	960
12.1	43700	192	61.3	221000	972
12.9	46300	204	62.0	223000	983
13.6	49100	216	62.7	226000	994
14.5	52000	229	63.4	228000	1000
15.3	55100	242	64.0	230000	1010
16.2	58200	256	64.6	233000	1020
17.1	61500	271	65.2	235000	1030
18.0	64900	286	65.8	237000	1040
19.0	68400	301	66.4	239000	1050
20.0	71900	317	66.9	241000	1060
21.0	75600	333	67.4	243000	1070
22.0	79300	349	68.0	245000	1080
23.1	83100	366	68.4	246000	1080
24.1	86900	383	68.9	248000	1090
25.2	90800	400	69.4	250000	1100
26.3	94700	417	69.8	251000	1110
27.4	98700	435	70.2	253000	1110
28.5	103000	452	70.6	254000	1120
29.6	107000	470	71.0	256000	1130
30.8	111000	488	71.4	257000	1130
31.9	115000	506	71.8	258000	1140
33.0	119000	523	72.1	260000	1140
34.2	123000	541	72.5	261000	1150
35.3	127000	559	72.8	262000	1150
36.4	131000	577	73.2	263000	1160
37.5	135000	595	73.5	265000	1170
38.6	139000	613	73.8	266000	1170
39.8	143000	630	74.2	267000	1180
40.9	147000	648	74.5	268000	1180
41.9	151000	665	74.8	269000	1190
43.0	155000	682	75.1	270000	1190
44.1	159000	699	75.5	272000	1200
45.2	163000	716	75.8	273000	1200
46.2	166000	732	76.1	274000	1210
47.2	170000	749	76.5	275000	1210
48.3	174000	765	76.8	277000	1220
49.3	177000	781			
50.2	181000	796			
51.2	184000	812			
52.2	188000	827			
53.1	191000	842			
54.0	194000	856			
54.9	198000	870			
55.8	201000	884			
56.6	204000	898			
57.5	207000	911			

Accuracy: Greatest of either ±5% of controlled flow rate or ±2% of maximum flow rate.

Note 6: Above values are related to maximum flow rate setting of the valve and thereby defining the flow through the valve at maximum control signal, normally 10V. Values above do not relate to control signals below 10V. All above valves will have 1000 positions between the pre-set flow value and 0V if control range is selected to 0-10V.

FlowCon International recommends that the SM PICV valves are selected to ensure that the set maximum flow rates are minimum 50% of the rated valve maximum capacity.

FLANGE MATCH SM HOUSING

Model no.	Flange size (inch)	ASME B16.5 weld neck flanges		ASME B16.5 slip on flanges		Flange size (mm)	EN1092-1[7]				EN1092-1[8]			
		Class 150	Class 300	Class 150	Class 300		PN10	PN16	PN25	PN40	PN10	PN16	PN25	PN40
SM.3.x	2	-	✓	-	✓	50	✓	✓	✓	✓	✓	✓	✓	✓
	2 1/2	✓	✓	✓	✓	65	✓	✓	✓	✓	✓	✓	✓	✓
	3	✓	✓	-	-	80	✓	✓	✓	✓	-	-	-	-
SM.4.x	3	✓	✓	✓	✓	80	✓	✓	✓	✓	✓	✓	✓	✓
	4	✓	✓	-	-	100	✓	✓	✓	✓	-	-	-	-
SM.5.x	5	✓	✓	✓	✓	125	✓	✓	✓	✓	✓	✓	✓	✓
	6	✓	-	-	-	150	✓	✓	✓	✓	-	-	-	-
SM.6.2	8	-	✓	-	✓	200	-	-	✓	✓	-	-	✓	✓
	10	✓	-	✓	-	250	-	✓	✓	✓	-	✓	✓	✓

Note 7: Type 02 and 35/36/37 (loose plate flange with weldring neck / pressed collar with long neck / pressed collar) or Type 04 and 34 (loose plate flange with weld-neck collar) or Type 11 with flange facing A/B (weld-neck flange with flat face or raised face).

Note 8: Type 12 with flange facing A/B (hubbed slip-on flange with flat face or raised face).

GENERAL DESCRIPTION

The SM Series are self balancing dynamic flow control valves that are pressure independent, two-way, modulating to accept digital or analog input signals. The valves accept 2-10V DC, 4-20mA, digital 2-position or digital 3-point floating input signals. Each valve has an adjustable maximum flow rate setting to enable flow limitation and balancing to the coils or zones that the valves are controlling.

All SM actuators are microprocessor based with a self-calibrating feature.
The SM valve is of the wafer style for fitting between flanges. They are available in three different valve bodies for flange connections.

GENERAL SPECIFICATIONS

1. PRESSURE INDEPENDENT DYNAMIC CONTROL VALVE FLOWCON SM

1.1. Contractor shall install dynamic control valves where indicated in drawings.
1.2. Valve shall be an electronic, dynamic, modulating, 2-way pressure independent control device.
1.3. Pressure independent dynamic control valve shall accurately control flow, independent of system pressure fluctuation.
1.4. Maximum flow setting shall be adjustable to minimum 51 different settings within the range of the valve size.
1.5. Valve and actuator coupling shall have snap couplings for fast mounting and demounting.

2. VALVE ACTUATOR

2.1. Valve and actuator coupling shall have snap couplings for fast mounting and demounting.
2.2. Actuator housing shall be rated to IP54 including up-side-down mounting.
2.3. Actuator shall be driven by a 24V AC/DC motor and shall accept 0-10V DC, 2-10V DC, 0-20mA, 4-20mA, 2-position or 3-point floating electric input signal.
2.4. Actuator shall be capable of providing same as input, 4-20mA, 0-10V DC or 2-10V DC feedback signal to the control system.
2.5. Automatic calibration of valve position shall be standard.
2.6. Actuator shall include display and buttons for external programming of all settings.
2.7. External display of current valve flow, maximum valve flow, input signal, feedback signal and operational direction shall be standard.
2.8. Optional fail safe system to power valve to either open (max. setting) or closed position from any position in case of power failure shall be available.
2.9. Optional BACnet connection for remote setting and control af actuator shall be available.

continues...

GENERAL SPECIFICATIONS (continued)

3. VALVE HOUSING

3.1. Valve housing shall consist of ductile iron ASTM A395 Grade 60-40-18 rated at no less than 4000 kPa static pressure and +120°C.
3.2. Valve housing shall be permanently marked to show direction of flow.
3.3. Valve housing shall be for installation between flanges.
3.4. Dual pressure/temperature test plugs for verifying accuracy of flow performance shall be provided for all valve sizes.
3.5. Identification label according to PED-requirements shall be available for all valves.

4. FLOW REGULATOR / AUTOMATIC BALANCING UNIT

4.1. Flow regulation unit shall be manufactured of stainless steel and hydrogenated acrylonitrile-butadiene-rubber and shall be capable of controlling flow within ±5% rated flow rate or ±2% of maximum flow rate.
4.2. Flow regulation unit shall be accessible for change-out or maintenance.

APPLICATION AND SCHEMATIC EXAMPLE

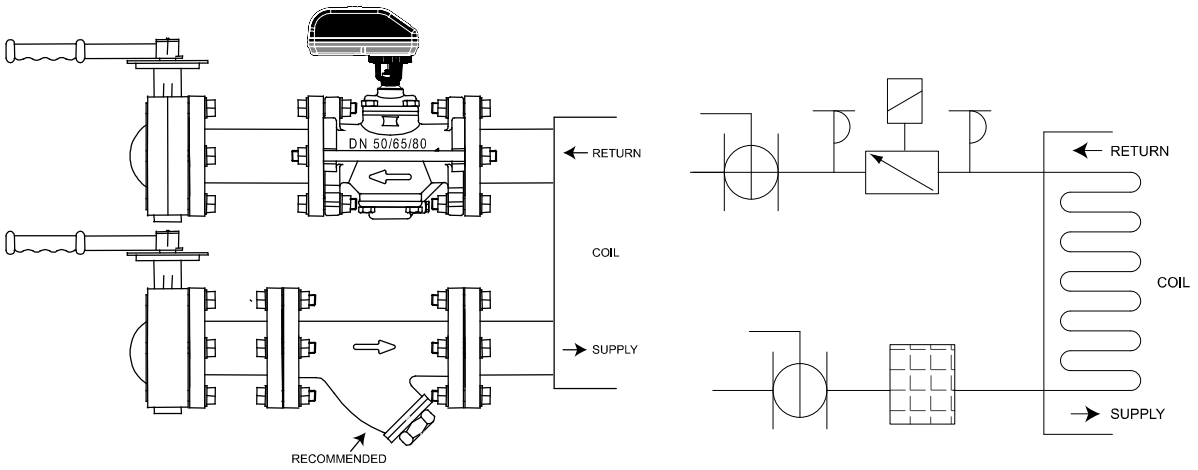

UPDATES

For latest updates please see www.flowcon.com

GRUNDFOS

Submittal Data

PROJECT:		UNIT TAG:		QUANTITY:	
		TYPE OF SERVICE:			
REPRESENTATIVE:		SUBMITTED BY:		DATE:	
ENGINEER:		APPROVED BY:		DATE:	
CONTRACTOR:		ORDER NO.:		DATE:	

Product photo could vary from the actual product

CRNE 125-2-2 A-G-A-E-HQQE

Vertical, multistage centrifugal pump with integrated frequency converter. Pump materials in contact with the liquid are in high-grade stainless steel (EN 1.4401)

Conditions of Service	
Flow:	800 US gpm
Head:	80.21 psi
Efficiency:	67.8 %
Liquid:	Water
Temperature:	60 °F
NPSH required:	4.58 psi
Specific Gravity:	1.001

Pump Data	
Liquid temperature range:	-40 .. 248 °F
Maximum ambient temperature:	104 °F
Shaft seal:	HQQE
Product number:	99266493

Motor Data	
Rated power - P2:	30 HP
Rated voltage:	460 V
Main frequency:	60 Hz
Enclosure class:	IP55
Insulation class:	F
Motor protection:	YES
Motor type:	180AA
Eff. 1/1:	91.7 %

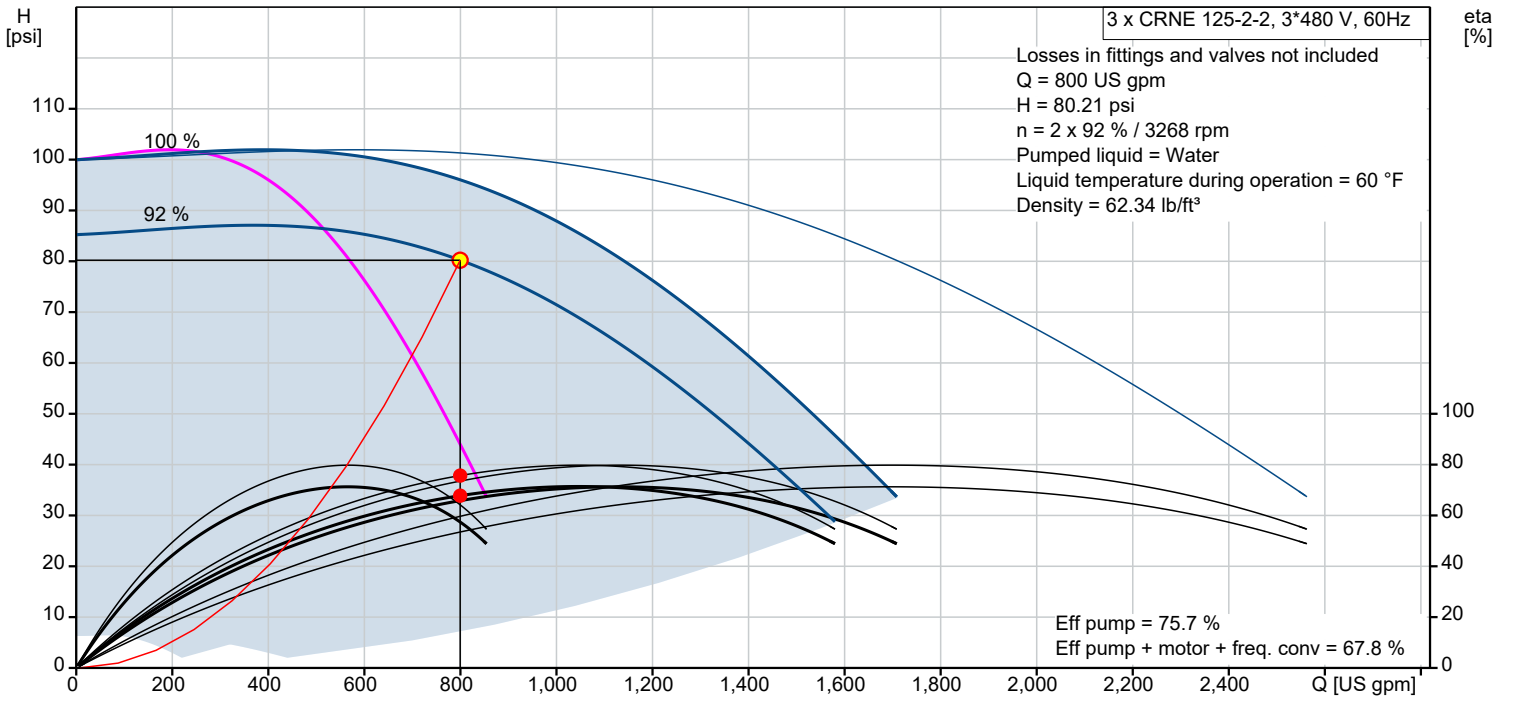

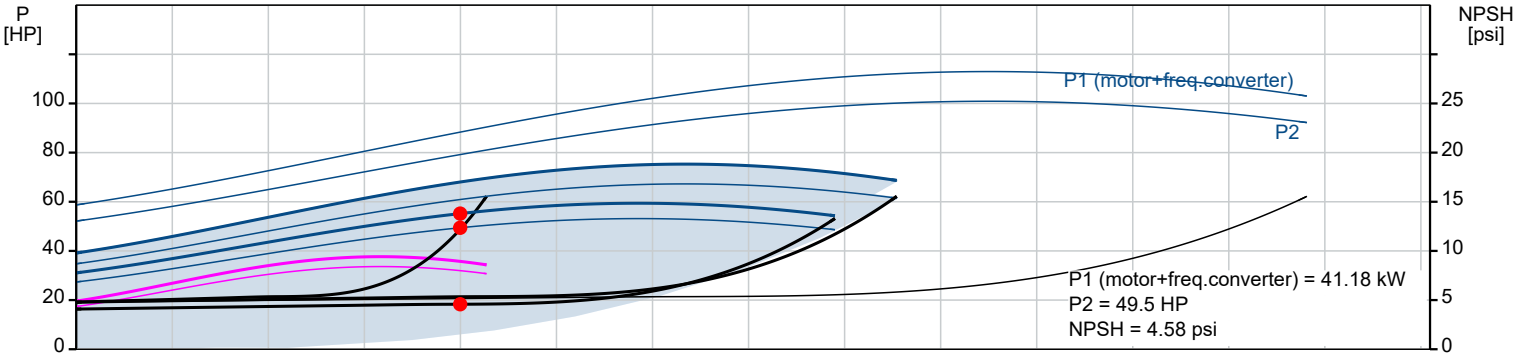

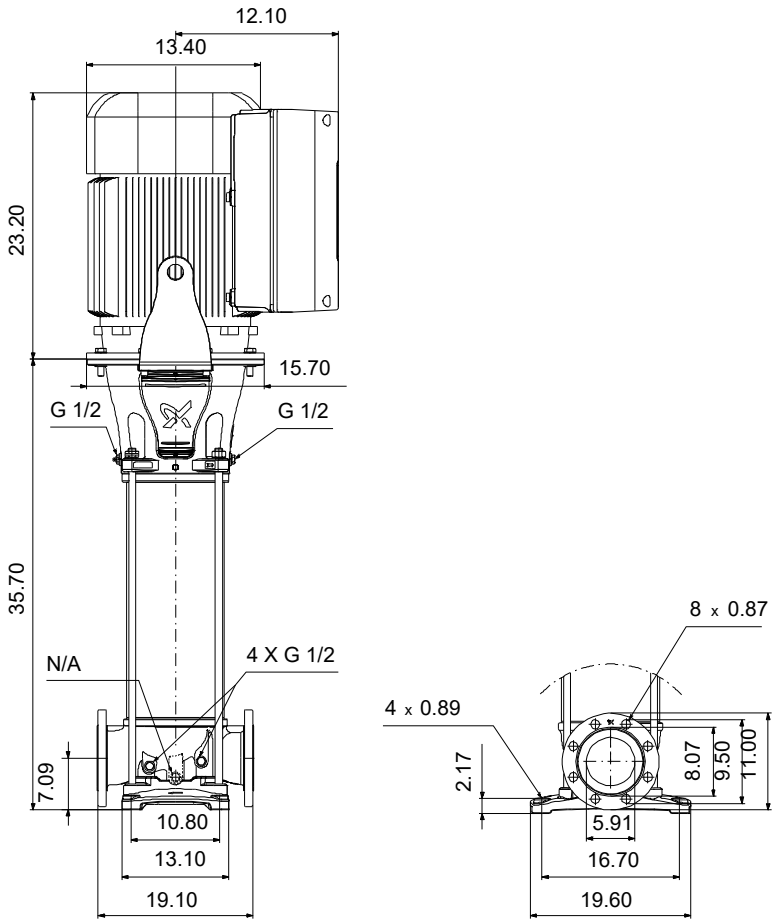

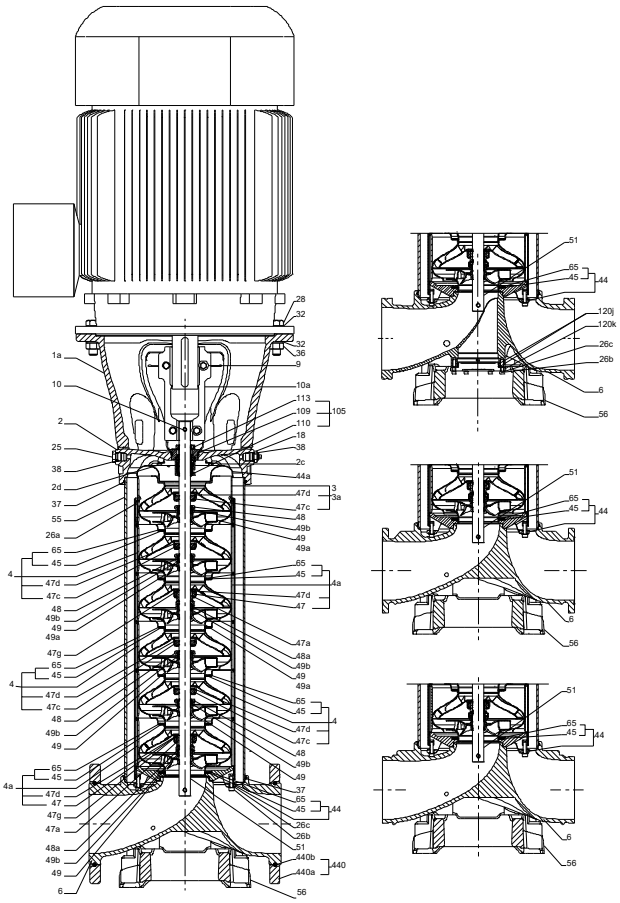

Materials:

Base:	Stainless steel
Base:	EN 1.4408
Base:	ASTM A351 CF8M
Impeller:	Stainless steel
Impeller:	AISI 316
Impeller:	EN 1.4401
Material code:	A
Code for rubber:	E

Company name: Fluid Industrial Mfg
Created by:
Phone:

Date: 4/1/2021

Count	Description
1	**CRNE 125-2-2 A-G-A-E-HQQE**

Product photo could vary from the actual product

Product No.: 99266493

Vertical, multistage centrifugal pump with inlet and outlet ports on same the level (inline). Pump materials in contact with the liquid are in high-grade stainless steel. The Grundfos cartridge shaft seal ensures high reliability, safe handling, and easy access and service. Power transmission is via a rigid split coupling. Pipe connection is via ANSI flanges.

The pump is fitted with a 3-phase, fan-cooled asynchronous motor. The motor includes a frequency converter and PI controller in the motor terminal box. This enables continuously variable control of the motor speed, which again enables adaptation of the performance to a given requirement. An operating panel on the motor terminal box enables setting of required setpoint as well as setting of pump to "Min." or "Max." operation or to "Stop". The operating panel has indicator lights for "Operation" and "Fault".

Communication with the pump is possible by means of Grundfos GO Remote (accessory). The remote control enables further settings as well as reading out of a number of parameters such as "Actual value", "Speed", "Power input" and total "Power consumption".

The terminal box holds terminals for these connections:

- pump start/stop input (potential-free contact)
- remote setpoint setting via analog signal, 0-10 V, 0(4)-20 mA
- 10 V voltage supply for setpoint potentiometer, Imax = 5 mA
- three analog sensor inputs, 0-10 V, 0(4)-20 mA
- 24 V voltage supply for sensor, Imax = 40 mA
- one analog output
- three digital inputs
- two Pt100 inputs
- two potential-free fault signal relays with changeover contact, reporting "Fault", "Operation" or "Ready"
- RS-485 GENIbus connection
- interface for Grundfos CIM fieldbus module.

Liquid:

Pumped liquid:	Water
Liquid temperature range:	-40 .. 248 °F
Selected liquid temperature:	60 °F
Density:	62.34 lb/ft³

Technical:

Rated pump speed:	3522 rpm
Actual calculated flow:	800 US gpm
Resulting head of the pump:	80.21 psi
Actual impeller diameter:	6.38 in
Pump orientation:	Vertical
Shaft seal arrangement:	Single
Code for shaft seal:	HQQE
Approvals:	CE,NSF/ANSI 61,NSF/ANSI 372
Curve tolerance:	ISO9906:2012 3B

Materials:

Base:	Stainless steel
	EN 1.4408
	ASTM A351 CF8M
Impeller:	Stainless steel
	EN 1.4401
	AISI 316
Bearing:	WC/WC
Support bearing:	Graflon
Material certified according to:	European standards
Bearing:	WC/WC

Company name: Fluid Industrial Mfg
Created by:
Phone:

Date: 4/1/2021

Count	Description

Installation:

Maximum ambient temperature:	104 °F
Maximum operating pressure:	232.06 psi
Max pressure at stated temperature:	232 psi / 250 °F
Type of connection:	ANSI
Size of suction port:	6 inch
Size of outlet port:	6 inch
Pressure rating for connection:	CLASS 150
Flange size for motor:	286TC

Electrical data:

Motor standard:	NEMA
Motor type:	180AA
IE Efficiency class:	NEMA Premium / IE3 60Hz
Rated power - P2:	30 HP
Power (P2) required by pump:	30 HP
Main frequency:	60 Hz
Rated voltage:	3 x 460 V
Service factor:	1.15
Rated current:	36.5 A
Cos phi - power factor:	0.88
Rated speed:	480-3540 rpm
IE efficiency:	IE3 91,7%
Motor efficiency at full load:	91.7 %
Number of poles:	2
Enclosure class (IEC 34-5):	IP55
Insulation class (IEC 85):	F
Motor Number:	85901139

Controls:

Frequency converter:	Built-in
Pressure sensor:	N

Others:

DOE Pump Energy Index VL:	0.59
Net weight:	692 lb
Gross weight:	957 lb
Shipping volume:	44.2 ft^3
Thrust handling device:	N
Country of origin:	US
Custom tariff no.:	8413.70.2040

Company name: Fluid Industrial Mfg
Created by:
Phone:

Date: 4/1/2021

99266493 CRNE 125-2-2 A-G-A-E-HQQE 60 Hz

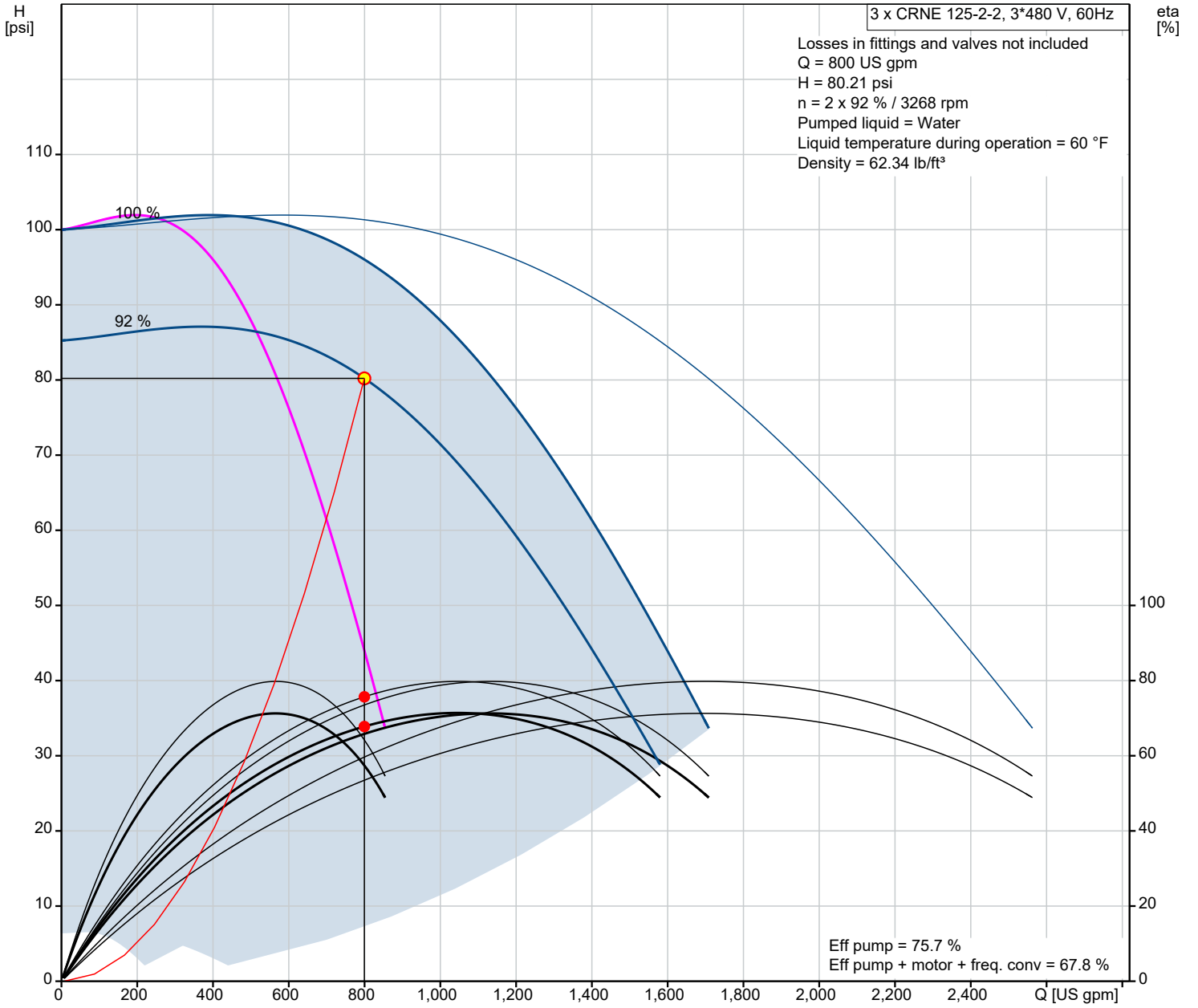

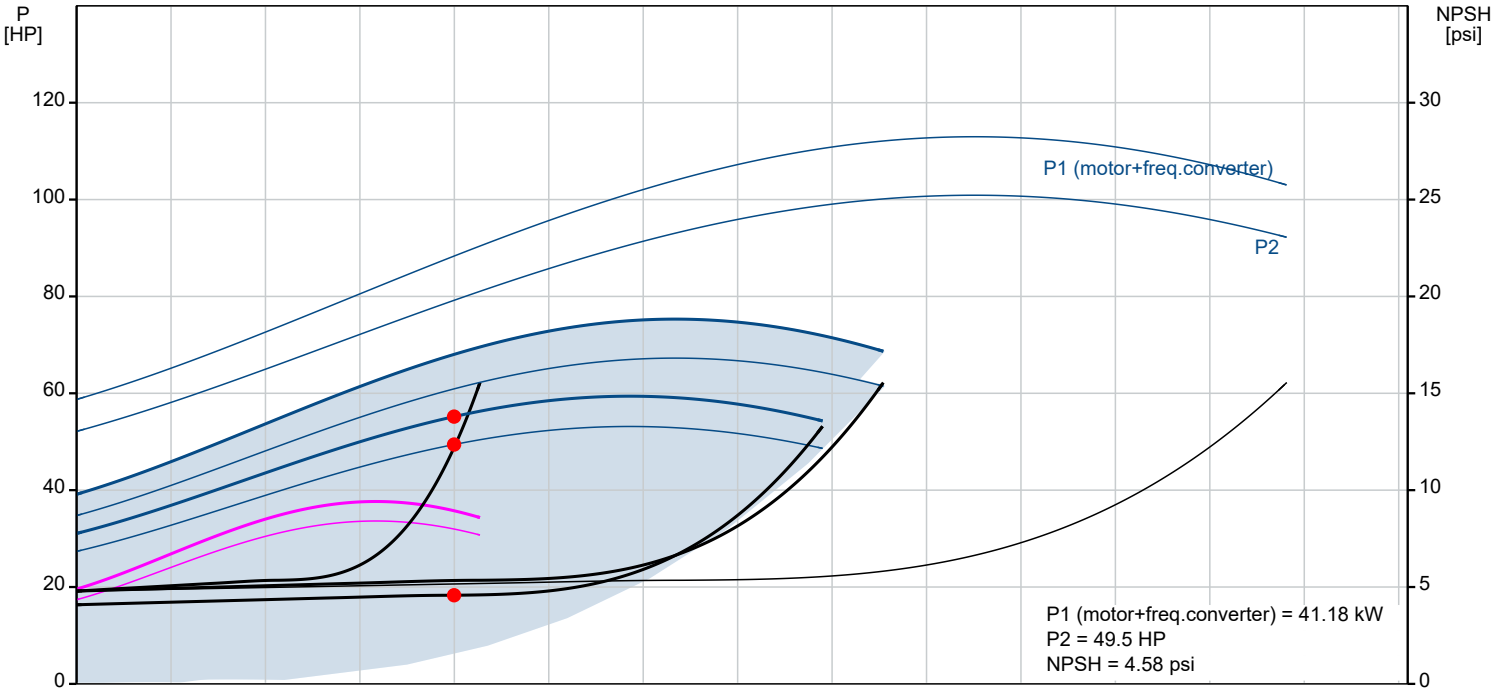

Company name: Fluid Industrial Mfg
Created by:
Phone:

Date: 4/1/2021

Description	Value
General information:	
Product name:	CRNE 125-2-2 A-G-A-E-HQQE
Product No.:	99266493
EAN:	5713826255831
Price:	
Technical:	
Rated pump speed:	3522 rpm
Actual calculated flow:	800 US gpm
Resulting head of the pump:	80.21 psi
Maximum head:	101.7 psi
Actual impeller diameter:	6.38 in
Stages:	2
Impellers:	2
Number of reduced-diameter impellers:	2
Low NPSH:	N
Pump orientation:	Vertical
Shaft seal arrangement:	Single
Code for shaft seal:	HQQE
Approvals:	CE,NSF/ANSI 61,NSF/ANSI 372
Curve tolerance:	ISO9906:2012 3B
Pump version:	A
Model:	A
Materials:	
Base:	Stainless steel
Base:	EN 1.4408
Base:	ASTM A351 CF8M
Impeller:	Stainless steel
Impeller:	EN 1.4401
Impeller:	AISI 316
Material code:	A
Code for rubber:	E
Bearing:	WC/WC
Support bearing:	Graflon
Material certified according to:	European standards
Bearing:	WC/WC
Installation:	
Maximum ambient temperature:	104 °F
Maximum operating pressure:	232.06 psi
Max pressure at stated temperature:	232 psi / 250 °F
Type of connection:	ANSI
Size of suction port:	6 inch
Size of outlet port:	6 inch
Pressure rating for connection:	CLASS 150
Flange size for motor:	286TC
Connect code:	G
Liquid:	
Pumped liquid:	Water
Liquid temperature range:	-40 .. 248 °F
Selected liquid temperature:	60 °F
Density:	62.34 lb/ft³
Electrical data:	
Motor standard:	NEMA
Motor type:	180AA
IE Efficiency class:	NEMA Premium / IE3 60Hz
Rated power - P2:	30 HP
Power (P2) required by pump:	30 HP
Main frequency:	60 Hz
Rated voltage:	3 x 460 V
Service factor:	1.15
Rated current:	36.5 A
Cos phi - power factor:	0.88
Rated speed:	480-3540 rpm
IE efficiency:	IE3 91,7%
Motor efficiency at full load:	91.7 %
Number of poles:	2

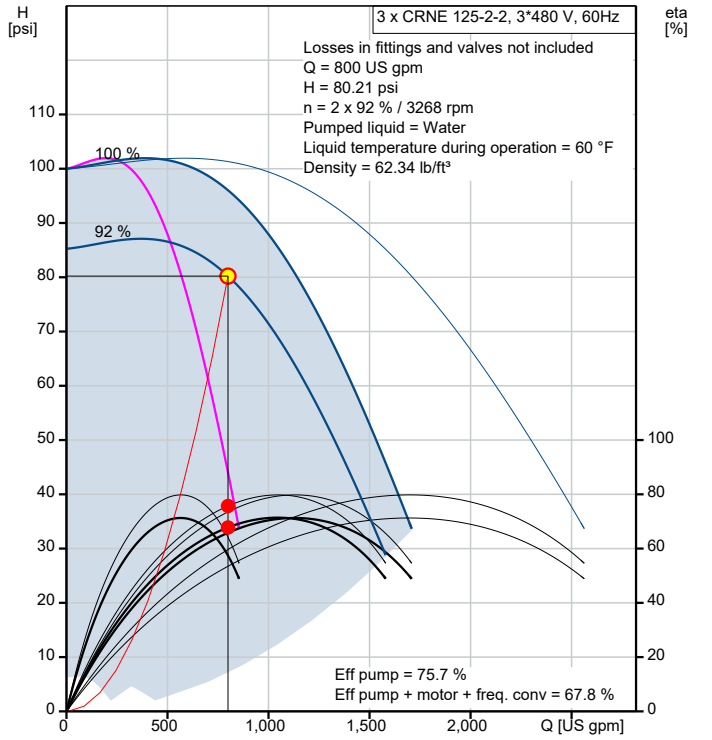

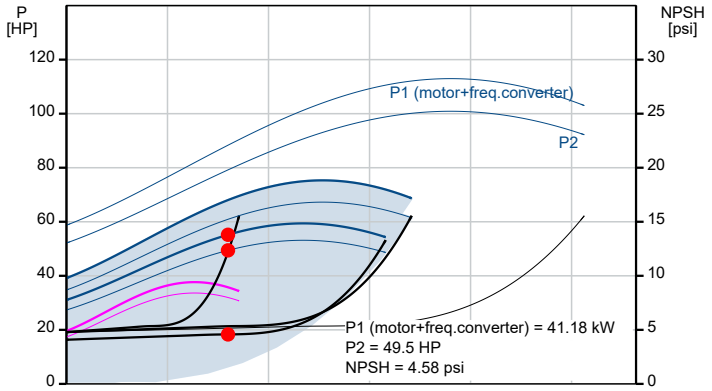

Company name: Fluid Industrial Mfg
Created by:
Phone:

Date: 4/1/2021

Description	Value
Enclosure class (IEC 34-5):	IP55
Insulation class (IEC 85):	F
Motor protection:	YES
Motor Number:	85901139
Controls:	
Function Module:	ADVANCED I/O
Frequency converter:	Built-in
Pressure sensor:	N
Others:	
DOE Pump Energy Index VL:	0.59
Net weight:	692 lb
Gross weight:	957 lb
Shipping volume:	44.2 ft^3
Config. file no:	95139708
Thrust handling device:	N
Country of origin:	US
Custom tariff no.:	8413.70.2040

Company name: Fluid Industrial Mfg
Created by:
Phone:

Date: 4/1/2021

99266493 CRNE 125-2-2 A-G-A-E-HQQE 60 Hz

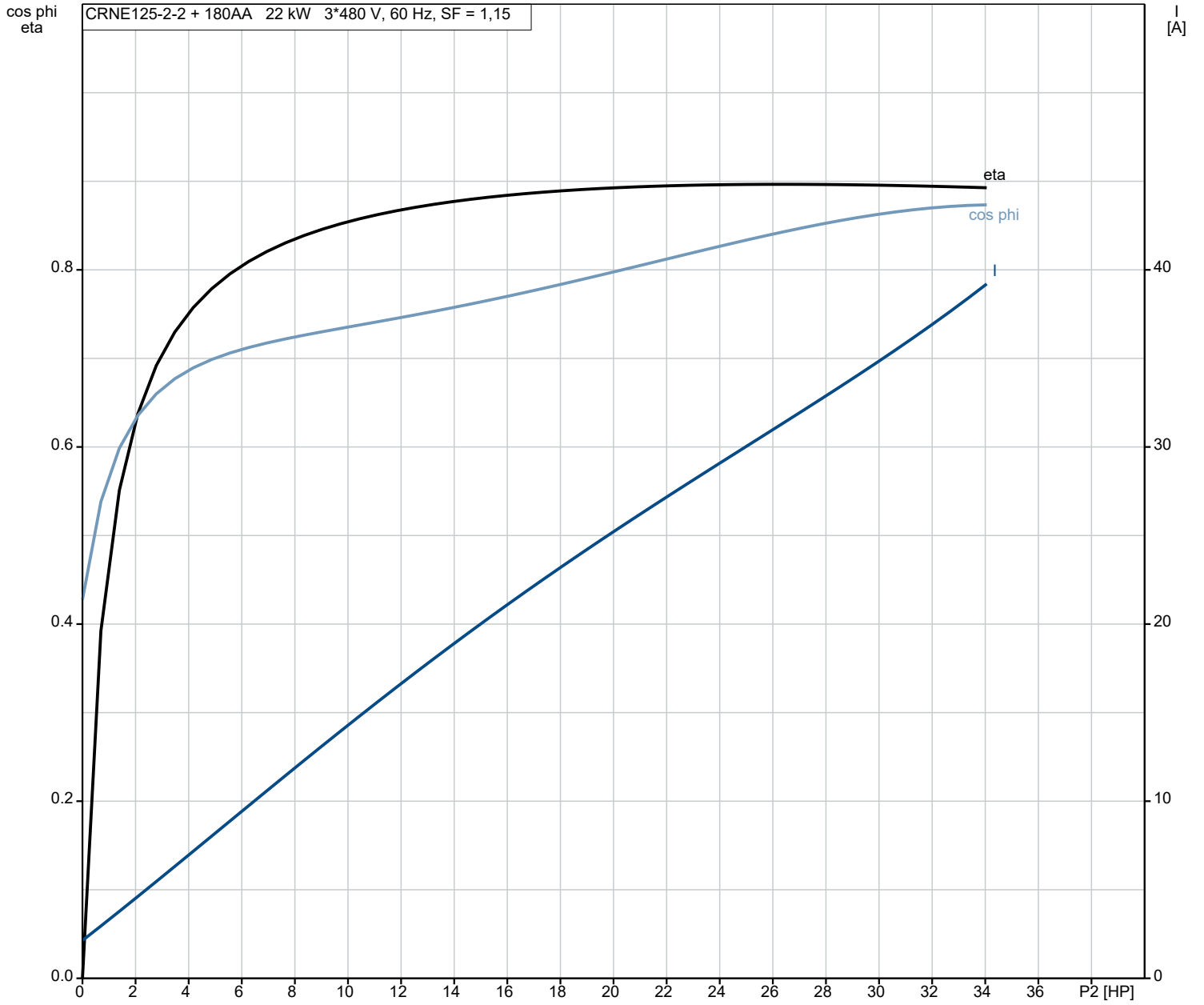

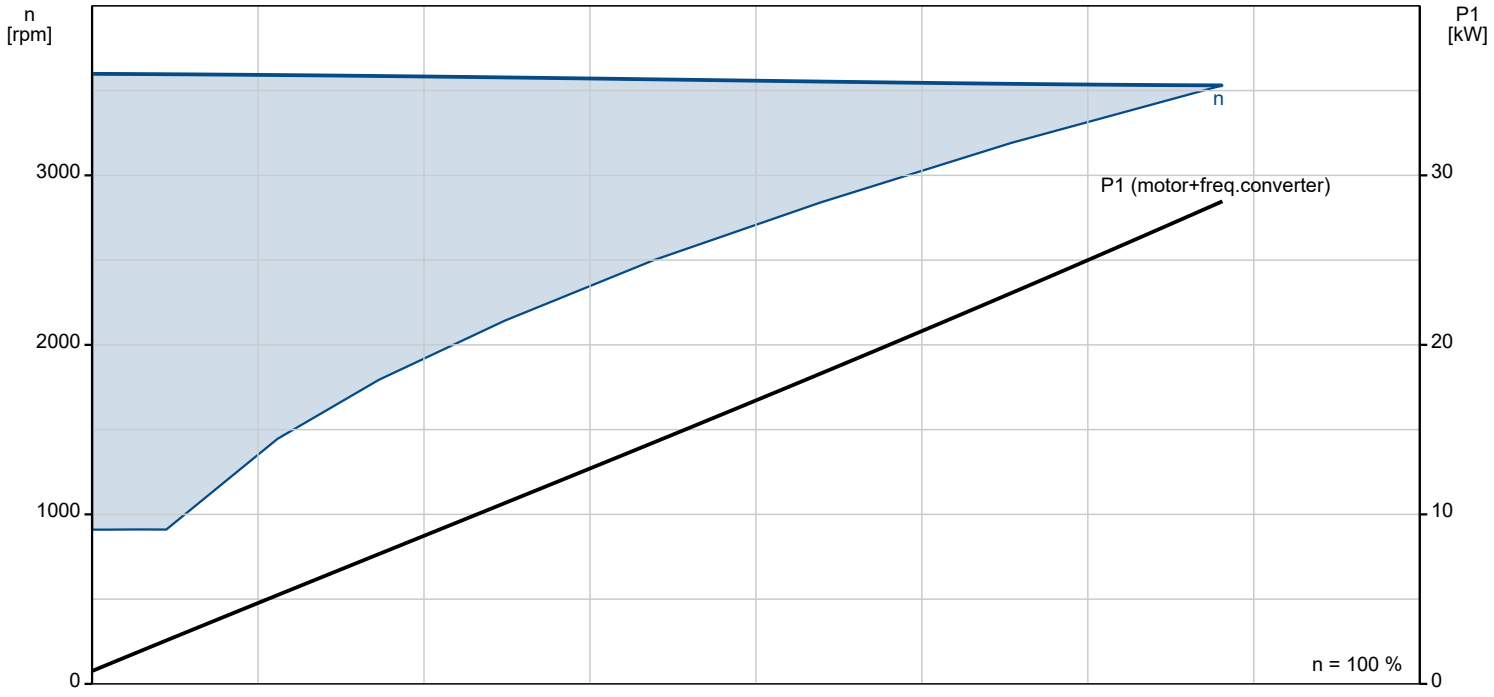

Company name: Fluid Industrial Mfg
Created by:
Phone:

Date: 4/1/2021

99266493 CRNE 125-2-2 A-G-A-E-HQQE 60 Hz

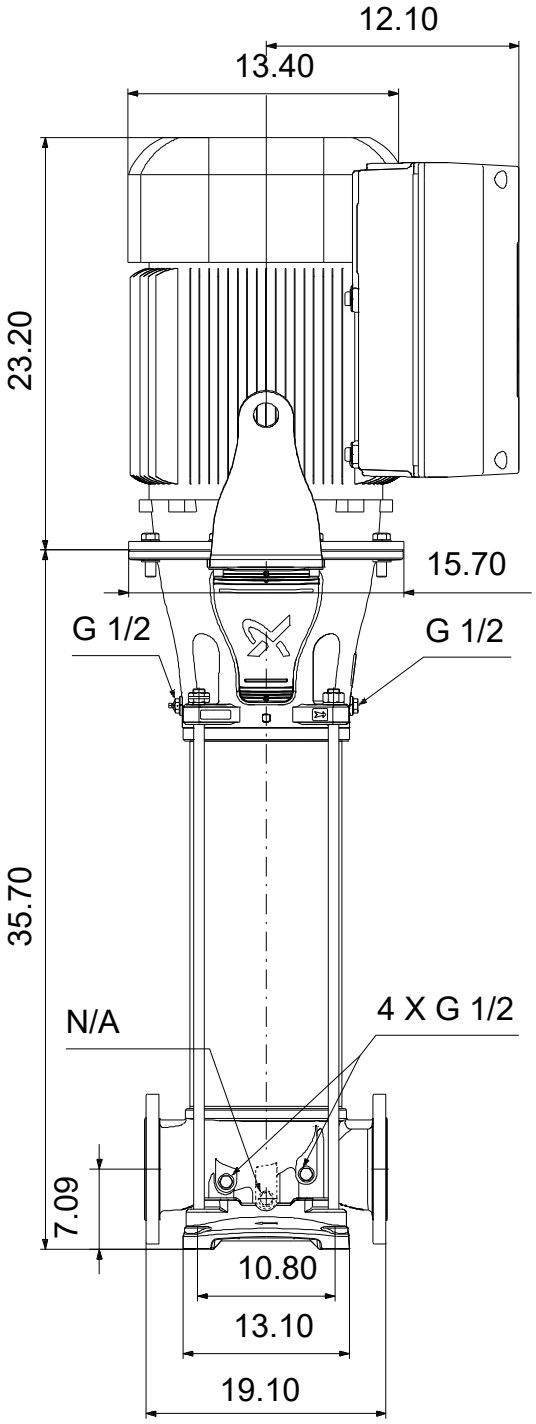

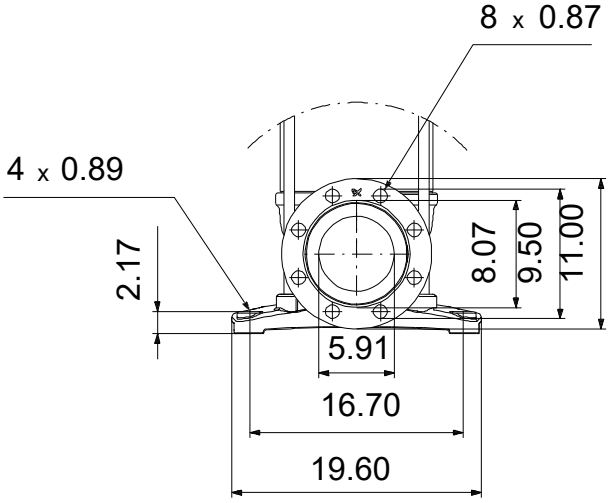

Note! All units are in [in] unless otherwise stated.
Disclaimer: This simplified dimensional drawing does not show all details.

Company name: Fluid Industrial Mfg
Created by:
Phone:

Date: 4/1/2021

99266493 CRNE 125-2-2 A-G-A-E-HQQE 60 Hz

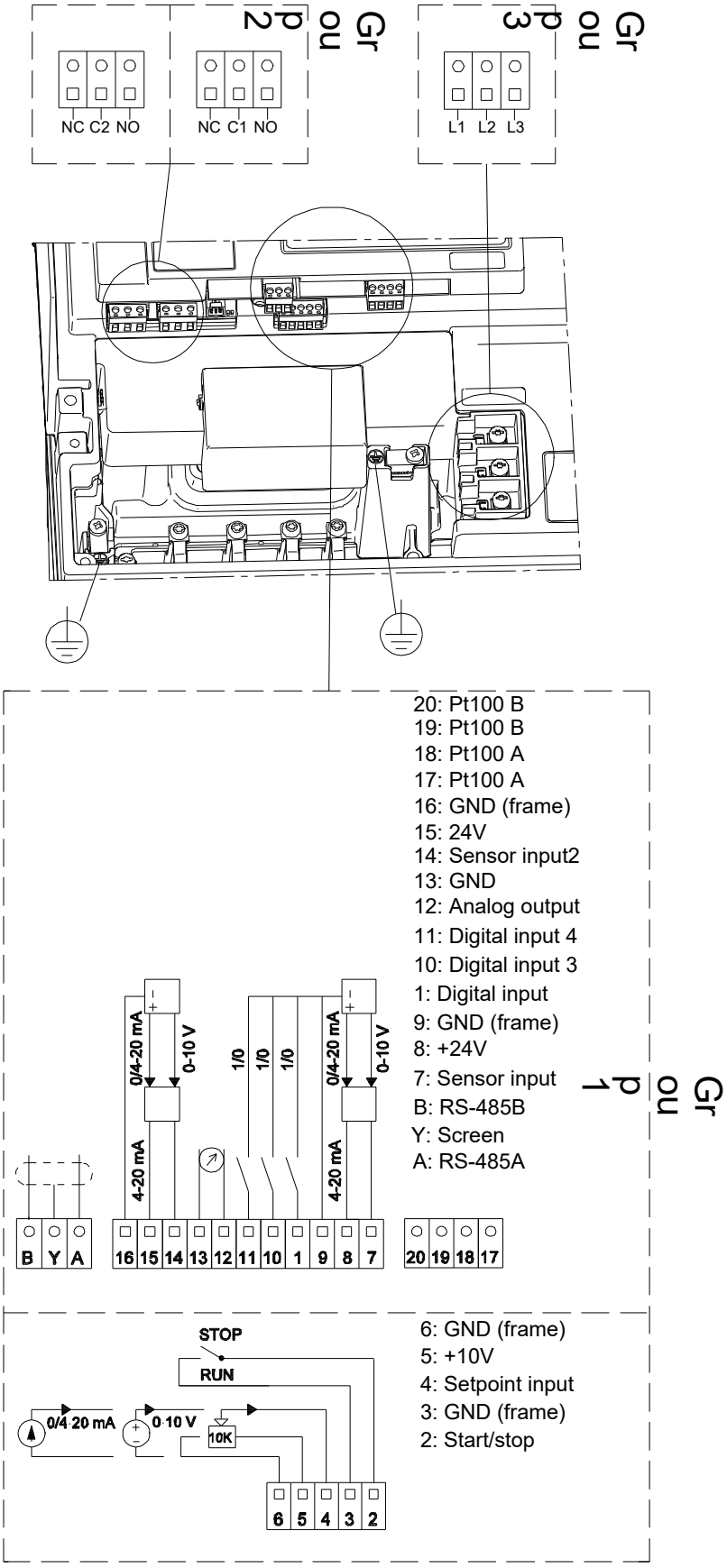

All units are [in] unless otherwise presented.

CRE, CRIE, CRNE, CRTE SPKE, MTRE, CME, BMS hp

Installation and operating instructions

Supplement instructions for pumps with integrated frequency converter

be
think
innovate

GRUNDFOS

Original installation and operating instructions

CONTENTS

Warning

Prior to installation, read these installation and operating instructions. Installation and operation must comply with local regulations and accepted codes of good practice.

1. Symbols used in this document

Warning

If these safety instructions are not observed, it may result in personal injury!

Warning

The surface of the product may be so hot that it may cause burns or personal injury.

Caution

If these safety instructions are not observed, it may result in malfunction or damage to the equipment.

Note

Notes or instructions that make the job easier and ensure safe operation.

2. General information

These installation and operating instructions are a supplement to installation and operating instructions for the corresponding standard pumps CR, CRI, CRN, CRT, SPK, MTR, CM and BMS hp.

For instructions not mentioned specifically here, please see installation and operating instructions for the standard pump.

3. General description

Grundfos E-pumps have standard motors with integrated frequency converter. The pumps are for three-phase mains connection.

3.1 Pumps without factory-fitted sensor

The pumps have a built-in PI controller and can be set up for an external sensor enabling control of the following parameters:

- pressure
- differential pressure
- temperature
- differential temperature
- flow rate.

From factory, the pumps have been set to control mode uncontrolled. The PI controller can be activated by means of R100 or Grundfos GO Remote.

3.2 Pumps with pressure sensor

The pumps have a built-in PI controller and are set up with a pressure sensor enabling control of the pump discharge pressure.

The pumps are set to control mode controlled. The pumps are typically used to hold a constant pressure in variable-demand systems.

3.3 Settings

The description of settings apply both to pumps without factory-fitted sensor and to pumps with a factory-fitted pressure sensor.

Setpoint

The desired setpoint can be set in three different ways:

- directly on the pump control panel
- via an input for external setpoint signal
- by means of the Grundfos wireless remote control R100 or Grundfos GO Remote.

Other settings

All other settings can only be made by means of R100 or Grundfos GO Remote.

Important parameters such as actual value of control parameter and power consumption can be read via R100 or Grundfos GO Remote.

If special or customized settings are required, use the Grundfos PC Tool E-products. Contact your local Grundfos company for more information.

4. Mechanical installation

The pump must be secured to a solid foundation by means of bolts through the holes in the flange or base plate.

Note In order to retain the UL/cUL approval, follow the additional installation procedures on page 29.

4.1 Motor cooling

To ensure sufficient cooling of motor and electronics, observe the following requirements:

- Make sure that sufficient cooling air is available.
- Keep the temperature of the cooling air below 40 °C.
- Keep cooling fins and fan blades clean.

4.2 Outdoor installation

When installed outdoors, the pump must be provided with a suitable cover to avoid condensation on the electronic components. See fig. 1.

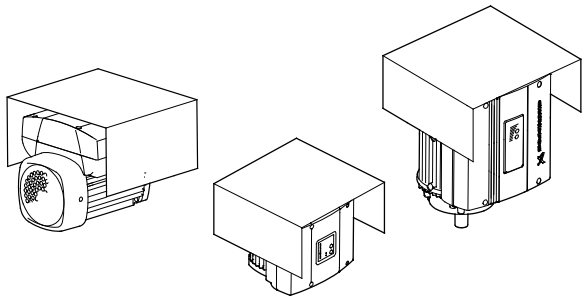

TM00 8622 0101 - TM02 8514 0304

Fig. 1 Examples of covers

Remove the drain plug pointing downwards in order to avoid moisture and water buildup inside the motor.

Vertically mounted pumps are enclosure class IP55 after removal of the drain plug. Horizontally mounted pumps change enclosure class to IP54.

5. Electrical connection

For description of how to connect E-pumps electrically, see the following pages:

5.1 Three-phase pumps, 1.1 - 7.5 kW, page 3

5.2 Three-phase pumps, 11-22 kW, page 6.

5.1 Three-phase pumps, 1.1 - 7.5 kW

Warning

The user or the installer is responsible for the installation of correct earthing and protection according to current national and local standards. All operations must be carried out by qualified personnel.

Warning

Never make any connections in the pump terminal box unless all electric supply circuits have been switched off for at least 5 minutes.

Note for instance that the signal relay may be connected to an external supply which is still connected when the mains supply is disconnected.

The above warning is indicated on the motor terminal box by this yellow label:

5.1.1 Preparation

Before connecting the E-pump to the mains, take the issues illustrated in the figure below into consideration.

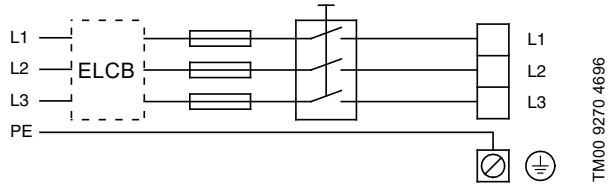

Fig. 2 Mains-connected pump with mains switch, backup fuses, additional protection and protective earthing

5.1.2 Protection against electric shock - indirect contact

Warning

The pump must be earthed in accordance with national regulations.

As the leakage current of 4 - 7.5 kW motors is greater than 3.5 mA, take extra precautions when earthing these motors.

EN 50178 and BS 7671 specify the following precautions when leakage current greater than 3.5 mA:

- The pump must be stationary and installed permanently.
- The pump must be permanently connected to the power supply.
- The earth connection must be carried out as duplicate conductors.

Protective earth conductors must always have a yellow/green (PE) or yellow/green/blue (PEN) colour marking.

5.1.3 Backup fuses

For recommended fuse sizes, see section *20.1 Supply voltage*.

5.1.4 Additional protection

If the pump is connected to an electrical installation where an earth leakage circuit breaker (ELCB) is used as additional protection, the circuit breaker must be of a type marked with the following symbols:

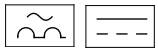
ELCB

This circuit breaker is type B.

The total leakage current of all the electrical equipment in the installation must be taken into account.

The leakage current of the motor in normal operation can be seen in section *20.3 Leakage current*.

During start and at asymmetrical supply systems, the leakage current can be higher than normal and may cause the ELCB to trip.

5.1.5 Motor protection

The pump requires no external motor protection. The motor incorporates thermal protection against slow overloading and blocking (IEC 34-11, TP 211).

5.1.6 Protection against mains voltage transients

The pump is protected against voltage transients by built-in varistors between the phases and between phases and earth.

5.1.7 Supply voltage and mains

3 x 380-480 V - 10 %/+ 10 %, 50/60 Hz, PE.

The supply voltage and frequency are marked on the pump nameplate. Make sure that the pump is suitable for the power supply of the installation site.

The wires in the terminal box must be as short as possible. Excepted from this is the protective earth conductor which must be so long that it is the last one to be disconnected in case the cable is inadvertently pulled out of the cable entry.

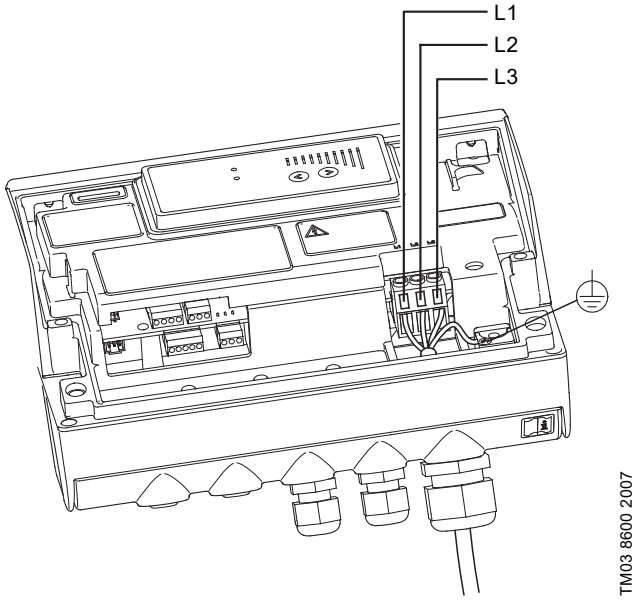

Fig. 3 Mains connection

Cable glands

Cable glands comply with EN 50626.

- 2 x M16 cable gland, cable diameter ∅4-∅10
- 1 x M20 cable gland, cable diameter ∅9-∅17
- 2 x M16 knock-out cable entries.

Warning

If the supply cable is damaged, it must be replaced by qualified personnel.

Grid types

Three-phase E-pumps can be connected to all grid types.

Warning

Do not connect three-phase E-pumps to a mains supply with a voltage between phase and earth of more than 440 V.

5.1.8 Start/stop of pump

Caution The number of starts and stops via the mains voltage must not exceed 4 times per hour.

When the pump is switched on via the mains, it will start after approximately 5 seconds.

If a higher number of starts and stops is desired, use the input for external start/stop when starting/stopping the pump.

When the pump is switched on via an external on/off switch, it will start immediately.

Automatic restart

Note If a pump set up for automatic restart is stopped due to a fault, it will restart automatically when the fault has disappeared.

However, automatic restart only applies to fault types set up to automatic restart. These faults could typically be one of these faults:

- temporary overload
- fault in the power supply.

5.1.9 Connections Advanced IO module

As standard the CRE, CRIE, CRNE, CRTE, SPKE, MTRE, BMS hp pump types come with the Advanced IO module. Optional the pump types can be acquired with the basic Pump IO module. See section *5.1.10 Connections basic Pump IO module*.

Advanced IO module

The module has a number of inputs and outputs enabling the motor to be used in advanced applications where many inputs and outputs are required.

The Advanced IO module has these connections:

- start/stop terminals
- three digital inputs
- one setpoint input
- one sensor input
- one analog output
- GENIbus connection.

Note If no external on/off switch is connected, connect terminals 2 and 3 using a short wire.

As a precaution, the wires to be connected to the following connection groups must be separated from each other by reinforced insulation in their entire lengths:

Group 1: Inputs

- start/stop (terminals 2 and 3)
- digital inputs (terminals 1 and 9, 10 and 9, 11 and 9)
- setpoint input (terminals 4, 5 and 6)
- sensor input (terminals 7 and 8)
- GENIbus (terminals B, Y and A).

All inputs are internally separated from the mains-conducting parts by reinforced insulation and galvanically separated from other circuits.

All control terminals are supplied with protective extra-low voltage (PELV), thus ensuring protection against electric shock.

Group 2: Output (relay signal, terminals NC, C, NO)

The output is galvanically separated from other circuits.

Therefore, the supply voltage or protective extra-low voltage can be connected to the output as desired.

- analog output (terminal 12 and 13).

Group 3: Mains supply (terminals L1, L2, L3)

A galvanic separation must fulfil the requirements for reinforced insulation including creepage distances and clearances specified in EN 60335.

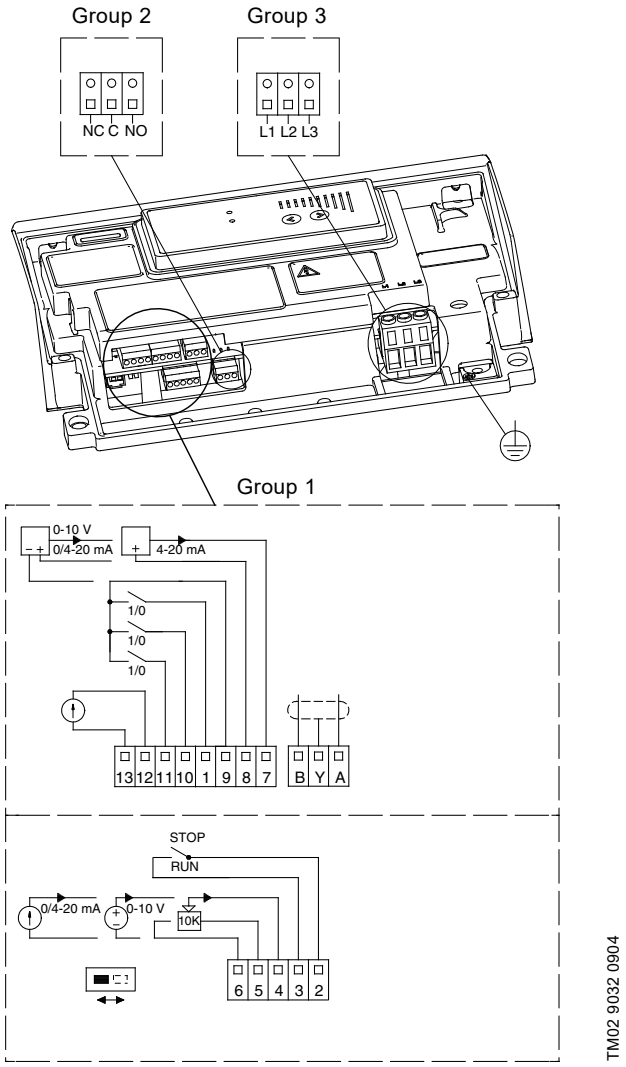

Fig. 4 Connection terminals Advanced IO module

13	GND (frame)
12	Analog output
11	Digital input 4
10	Digital input 3
1	Digital input 2
9	GND (frame)
8	+24 V
7	Sensor input
B	RS-485B
Y	Screen
A	RS-485A
6	GND (frame)
5	+10 V
4	Setpoint input
3	GND (frame)
2	Start/stop

5.1.10 Connections basic Pump IO module

As standard the CME pump types come with the basic Pump IO module. Optional the pump types can be acquired with the Advanced IO module. See section *5.1.9 Connections Advanced IO module*.

Note If no external on/off switch is connected, connect terminals 2 and 3 using a short wire.

As a precaution, the wires to be connected to the following connection groups must be separated from each other by reinforced insulation in their entire lengths:

Group 1: Inputs

- start/stop terminals 2 and 3
- digital input terminals 1 and 9
- setpoint input terminals 4, 5 and 6
- sensor input terminals 7 and 8
- GENIbus terminals B, Y and A

All inputs (group 1) are internally separated from the mains-conducting parts by reinforced insulation and galvanically separated from other circuits.

All control terminals are supplied with protective extra-low voltage (PELV), thus ensuring protection against electric shock.

Group 2: Output (relay signal, terminals NC, C, NO)

The output (group 2) is galvanically separated from other circuits. Therefore, the supply voltage or protective extra-low voltage can be connected to the output as desired.

Group 3: Mains supply (terminals N, PE, L)

A galvanic separation must fulfil the requirements for reinforced insulation including creepage distances and clearances specified in EN 60335.

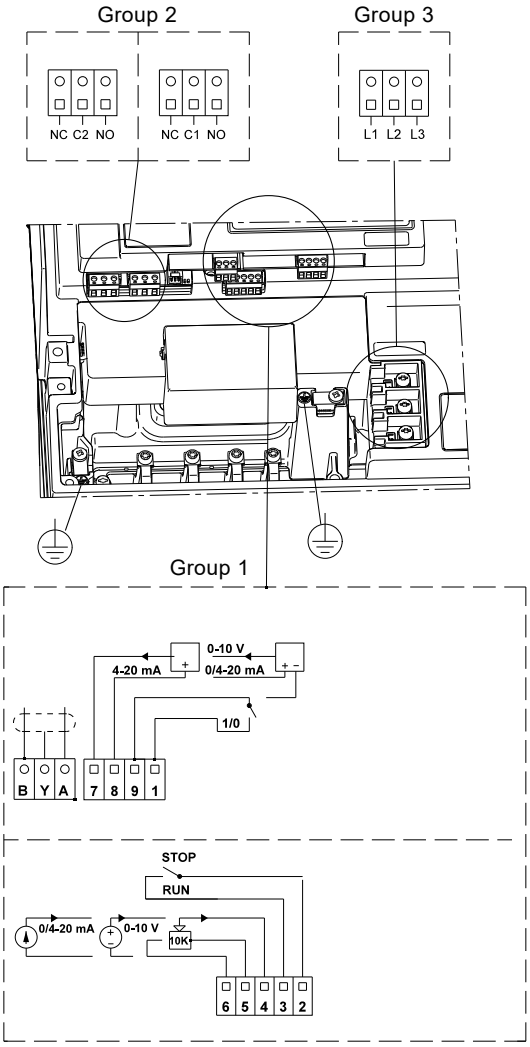

Fig. 5 Connection terminals of pump IO module

1	Digital input
9	GND (frame)
8	+24 V
7	Sensor input
B	RS-485B
Y	Screen
A	RS-485A
6	GND (frame)
5	+10 V
4	Setpoint input
3	GND (frame)
2	Start/stop

5.2 Three-phase pumps, 11-22 kW

Warning

The user or the installer is responsible for the installation of correct earthing and protection according to current national and local standards. All operations must be carried out by qualified personnel.

Warning

Never make any connections in the pump terminal box unless all electric supply circuits have been switched off for at least 5 minutes.

Note for instance that the signal relay may be connected to an external supply which is still connected when the mains supply is disconnected.

Warning

The surface of the terminal box may be above 70 °C when the pump is operating.

5.2.1 Preparation

Before connecting the E-pump to the mains, take the issues illustrated in the figure below into consideration.

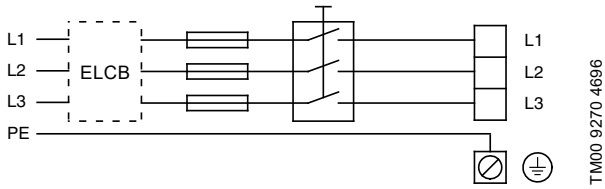

Fig. 6 Mains-connected pump with mains switch, backup fuses, additional protection and protective earthing

5.2.2 Protection against electric shock - indirect contact

Warning

The pump must be earthed in accordance with national regulations.

As the leakage current of 11-22 kW motors is greater than 10 mA, take extra precautions when earthing these motors.

EN 61800-5-1 specifies that the pump must be stationary and installed permanently when the leakage current is greater than 10 mA.

One of the following requirements must be fulfilled:

- A single protective earth conductor having a cross-sectional area of min. 10 mm^2 copper.

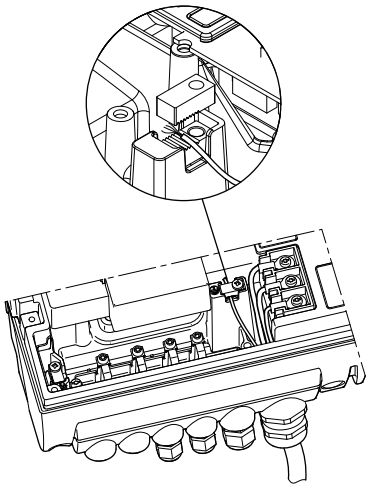

Fig. 7 Connection of a single protective earth conductor using one of the conductors of a 4-core mains cable with cross-sectional area of min. 10 mm^2

- Two protective earth conductors of the same cross-sectional area as the mains conductors, with one conductor connected to an additional earth terminal in the terminal box.

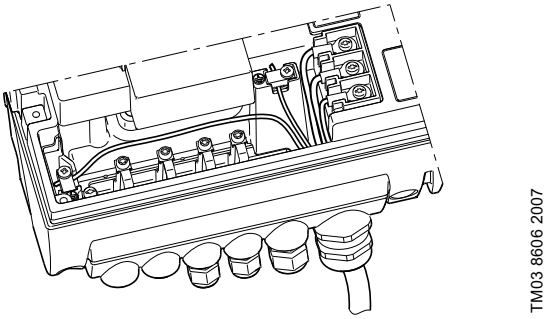

Fig. 8 Connection of two protective earth conductors using two of the conductors of a 5-core mains cable

Protective earth conductors must always have a yellow/green (PE) or yellow/green/blue (PEN) colour marking.

5.2.3 Backup fuses

For recommended fuse sizes, see section *21.1 Supply voltage*.

5.2.4 Additional protection

If the pump is connected to an electrical installation where an earth leakage circuit breaker (ELCB) is used as additional protection, the circuit breaker must be of a type marked with the following symbols:

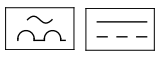
ELCB

This circuit breaker is type B.

The total leakage current of all the electrical equipment in the installation must be taken into account.

The leakage current of the motor in normal operation can be seen in section *21.3 Leakage current*.

During start and at asymmetrical supply systems, the leakage current can be higher than normal and may cause the ELCB to trip.

5.2.5 Motor protection

The pump requires no external motor protection. The motor incorporates thermal protection against slow overloading and blocking (IEC 34-11, TP 211).

5.2.6 Protection against mains voltage transients

The pump is protected against mains voltage transients in accordance with EN 61800-3 and is capable of withstanding a VDE 0160 pulse.

The pump has a replaceable varistor which is part of the transient protection.

Over time this varistor will be worn and need to be replaced. When the time for replacement has come, R100 and PC Tool E-products will indicate this as a warning. See section *19. Maintenance and service*.

5.2.7 Supply voltage and mains

3 x 380-480 V - 10 %/+ 10 %, 50/60 Hz, PE.

The supply voltage and frequency are marked on the pump nameplate. Make sure that the motor is suitable for the power supply of the installation site.

The wires in the terminal box must be as short as possible. Excepted from this is the protective earth conductor which must be so long that it is the last one to be disconnected in case the cable is inadvertently pulled out of the cable entry.

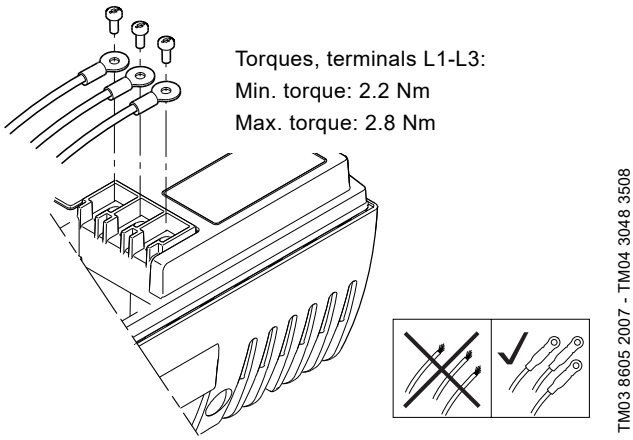

Fig. 9 Mains connection

Cable glands

Cable glands comply with EN 50626.

- 1 x M40 cable gland, cable diameter ∅16-∅28
- 1 x M20 cable gland, cable diameter ∅9-∅17
- 2 x M16 cable gland, cable diameter ∅4-∅10
- 2 x M16 knock-out cable entries.

Warning

If the supply cable is damaged, it must be replaced by qualified personnel.

Grid types

Three-phase E-pumps can be connected to all grid types.

Warning

Do not connect three-phase E-pumps to a mains supply with a voltage between phase and earth of more than 440 V.

5.2.8 Start/stop of pump

Caution The number of starts and stops via the mains voltage must not exceed 4 times per hour.

When the pump is switched on via the mains, it will start after approximately 5 seconds.

If a higher number of starts and stops is desired, use the input for external start/stop when starting/stopping the pump.

When the pump is switched on via an external on/off switch, it will start immediately.

5.2.9 Connections

As standard the pump types come with the Advanced IO module.

Advanced IO module

The Advanced IO module is the standard functional module in all MGE motors from 11 to 22 kW.

The module has a number of inputs and outputs enabling the motor to be used in advanced applications where many inputs and outputs are required.

The Advanced IO module has these connections:

- start/stop terminals
- three digital inputs
- one setpoint input
- one sensor input (feedback sensor)
- one sensor 2 input
- one analog output
- two Pt100 inputs
- two signal relay outputs
- GENIbus connection.

Note If no external on/off switch is connected, connect terminals 2 and 3 using a short wire.

As a precaution, the wires to be connected to the following connection groups must be separated from each other by reinforced insulation in their entire lengths:

Group 1: Inputs

- Start/stop (terminals 2 and 3)
- digital inputs (terminals 1 and 9, 10 and 9, 11 and 9)
- sensor input 2 (terminals 14 and 15)
- Pt100 sensor inputs (terminals 17, 18, 19 and 20)
- setpoint input (terminals 4, 5 and 6)
- sensor input (terminals 7 and 8)
- GENIbus (terminals B, Y and A).

All inputs are internally separated from the mains-conducting parts by reinforced insulation and galvanically separated from other circuits.

All control terminals are supplied with protective extra-low voltage (PELV), thus ensuring protection against electric shock.

Group 2: Output (relay signal, terminals NC, C, NO)

The output is galvanically separated from other circuits.

Therefore, the supply voltage or protective extra-low voltage can be connected to the output as desired.

- Analog output (terminal 12 and 13).

Group 3: Mains supply (terminals L1, L2, L3)

A galvanic separation must fulfil the requirements for reinforced insulation including creepage distances and clearances specified in EN 61800-5-1.

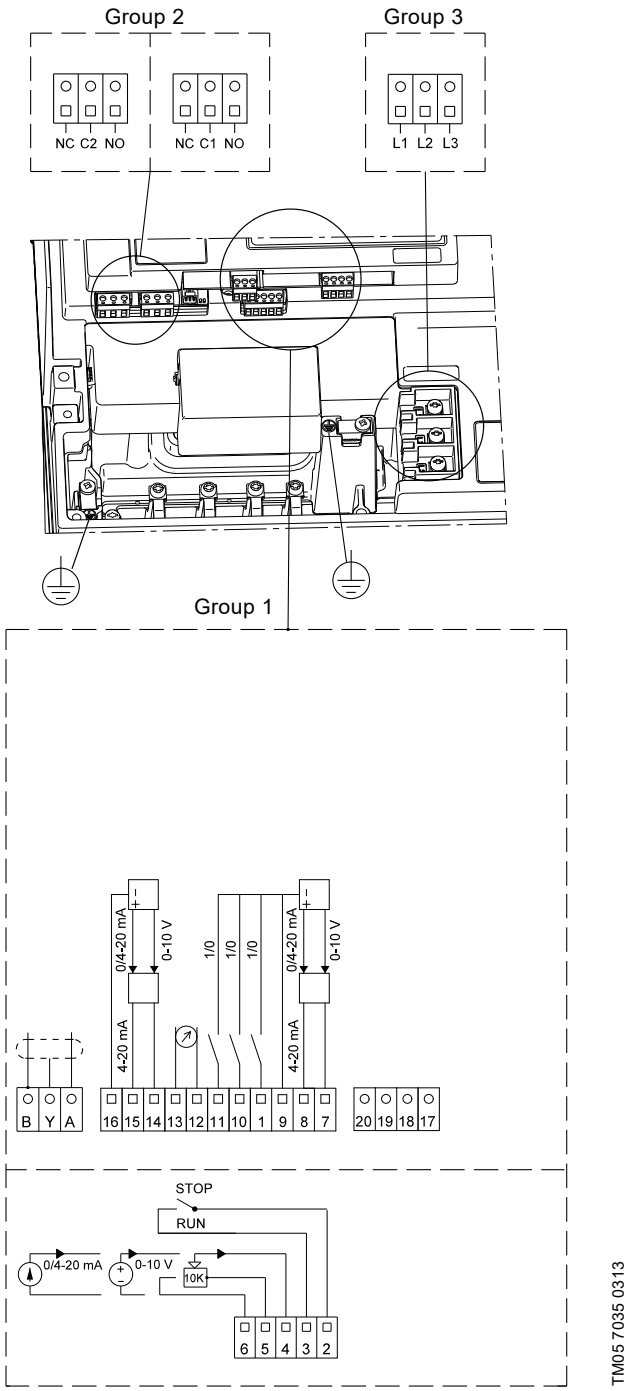

Fig. 10 Connection terminals Advanced IO module

20	Pt100 B	9	GND (frame)
19	Pt100 B	8	+24 V
18	Pt100 A	7	Sensor input
17	Pt100 A	B	RS-485B
16	GND (frame)	Y	Screen
15	24 V	A	RS-485A
14	Sensor input 2	6	GND (frame)
13	GND	5	+10 V
12	Analog output	4	Setpoint input
11	Digital input 4	3	GND (frame)
10	Digital input 3	2	Start/stop
1	Digital input		

5.3 Signal cables

- Use screened cables with a conductor cross-section of min. 0.5 mm^2 and max. 1.5 mm^2 for external on/off switch, digital input, setpoint and sensor signals.
- Connect the screens of the cables to frame at both ends with good frame connection. The screens must be as close as possible to the terminals. See fig. 11.

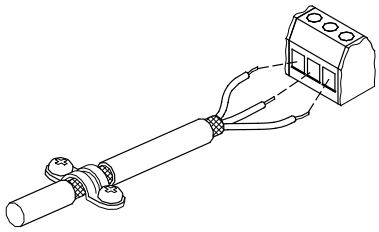

Fig. 11 Stripped cable with screen and wire connection

- Always tighten screws for frame connections whether a cable is fitted or not.
- Make the wires in the pump terminal box as short as possible.

5.4 Bus connection cable

5.4.1 New installations

For the bus connection, use a screened 3-core cable with a conductor cross-section of 0.2 mm^2 - 1.5 mm^2.

- If the pump is connected to a unit with a cable clamp which is identical to the one on the pump, connect the screen to this cable clamp.
- If the unit has no cable clamp as shown in fig. 12, leave the screen unconnected at this end.

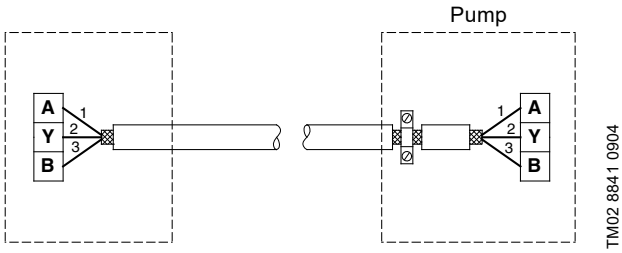

Fig. 12 Connection with screened 3-core cable

5.4.2 Replacing an existing pump

- If a screened 2-core cable is used in the existing installation, connect it as shown in fig. 13.

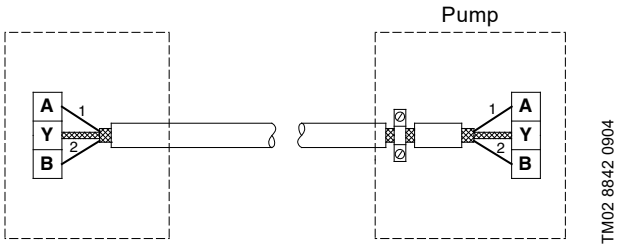

Fig. 13 Connection with screened 2-core cable

- If a screened 3-core cable is used in the existing installation, follow the instructions in section *5.4.1 New installations*.

6. Modes

Grundfos E-pumps are set and controlled according to operating and control modes.

6.1 Overview of modes

Operating modes	Normal	— Stop	— Min.	— Max.
Control modes	Uncontrolled	— Controlled		
	Constant curve	Constant pressure[1)]		

[1)] For this control mode the pump is equipped with a pressure sensor. The pump may also be equipped with a temperature sensor in which case the description would be constant temperature in control mode controlled.

6.2 Operating mode

When the operating mode is set to Normal, the control mode can be set to controlled or uncontrolled. See section *6.3 Control mode*.

The other operating modes that can be selected are Stop, Min. or Max.

- Stop: the pump has been stopped
- Min.: the pump is operating at its minimum speed
- Max.: the pump is operating at its maximum speed.

Figure 14 is a schematic illustration of min. and max. curves.

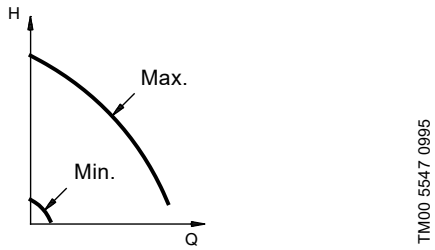

Fig. 14 Min. and max. curves

The max. curve can for instance be used in connection with the venting procedure during installation.

The min. curve can be used in periods in which a minimum flow is required.

If the power supply to the pump is disconnected, the mode setting will be stored.

The remote control R100 offers additional possibilities of setting and status displays. See section *9. Setting by means of R100*.

6.3 Control mode

6.3.1 Pumps without factory-fitted sensor

The pumps are factory-set to control mode uncontrolled.

In control mode uncontrolled, the pump will operate according to the constant curve set, see fig. 15.

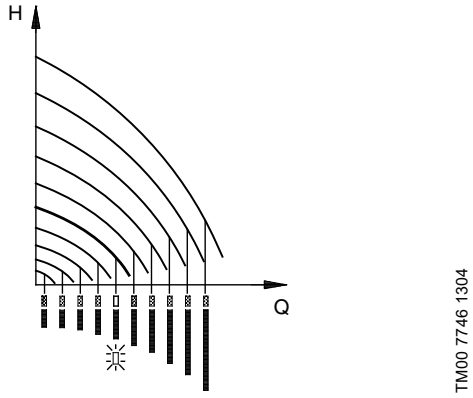

Fig. 15 Pump in control mode uncontrolled (constant curve)

6.3.2 Pumps with pressure sensor

The pump can be set to one of two control modes, i.e. controlled and uncontrolled, fig. 16.

In control mode controlled, the pump will adjust its performance, i.e. pump discharge pressure, to the desired setpoint for the control parameter.

In control mode uncontrolled, the pump will operate according to the constant curve set.

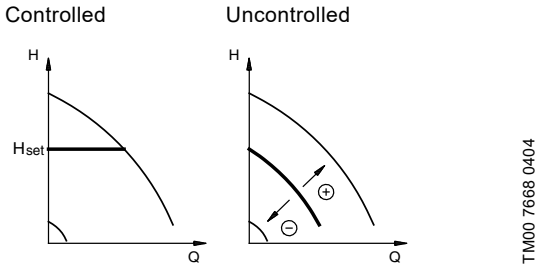

Fig. 16 Pump in control mode controlled (constant pressure) or uncontrolled (constant curve)

7. Setting up the pump

7.1 Factory setting

Pumps without factory-fitted sensor

The pumps have been factory-set to control mode uncontrolled. The setpoint value corresponds to 100 % of the maximum pump performance (see data sheet for the pump).

Pumps with pressure sensor

The pumps have been factory-set to control mode controlled. The setpoint value corresponds to 50 % of the sensor measuring range (see sensor nameplate).

8. Setting by means of control panel

The pump control panel, see fig. 17, incorporates the following buttons and indicator lights:

- Buttons, ⊛ and ⊛, for setpoint setting.
- Light fields, yellow, for indication of setpoint.
- Indicator lights, green (operation) and red (fault).

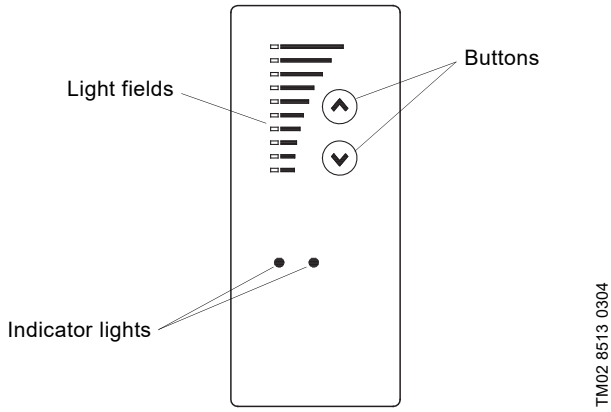

Fig. 17 Control panel, three-phase pumps, 1.1 - 22 kW

8.1 Setting of operating mode

Settings available:

- Normal
- Stop
- Min.
- Max.

Start/stop of pump

Start the pump by continuously pressing ⊛ until the desired setpoint is indicated. This is operating mode Normal.

Stop the pump by continuously pressing ⊛ until none of the light fields are activated and the green indicator light flashes.

Setting to Min.

Press ⊛ continuously to change to the min. curve of the pump (bottom light field flashes). When the bottom light field is on, press ⊛ for 3 seconds until the light field starts flashing.

To return to uncontrolled or controlled operation, press ⊛ continuously until the desired setpoint is indicated.

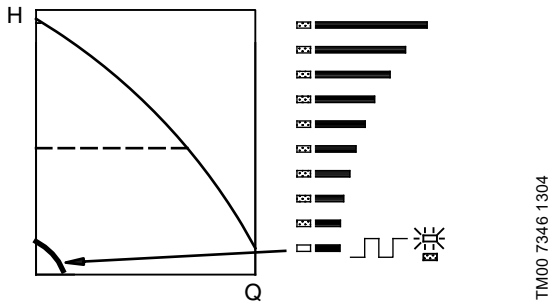

Fig. 18 Min. curve duty

Setting to Max.

Press ⊛ continuously to change to the max. curve of the pump (top light field flashes). When the top light field is on, press ⊛ for 3 seconds until the light field starts flashing.

To return to uncontrolled or controlled operation, press ⊛ continuously until the desired setpoint is indicated.

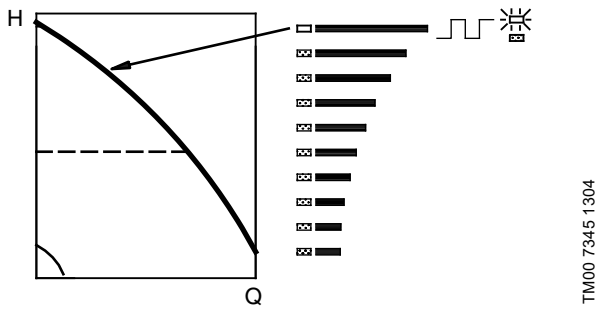

Fig. 19 Max. curve duty

8.2 Setpoint setting

Set the desired setpoint by pressing the button ⊛ or ⊛.

The light fields on the control panel will indicate the setpoint set. See examples in sections *8.2.1 Pump in control mode controlled (pressure control)* and *8.2.2 Pump in control mode uncontrolled*.

8.2.1 Pump in control mode controlled (pressure control)

Example

Figure 20 shows that the light fields 5 and 6 are activated, indicating a desired setpoint of 3 bar. The setting range is equal to the sensor measuring range. See the sensor nameplate.

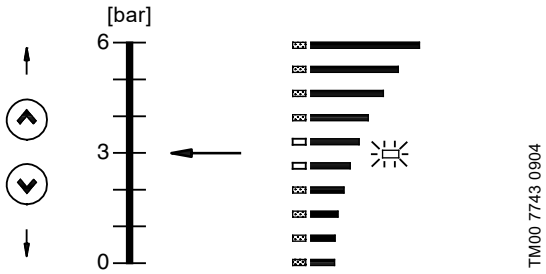

Fig. 20 Setpoint set to 3 bar, pressure control

8.2.2 Pump in control mode uncontrolled

Example

In control mode uncontrolled, the pump performance is set within the range from min. to max. curve. See fig. 21.

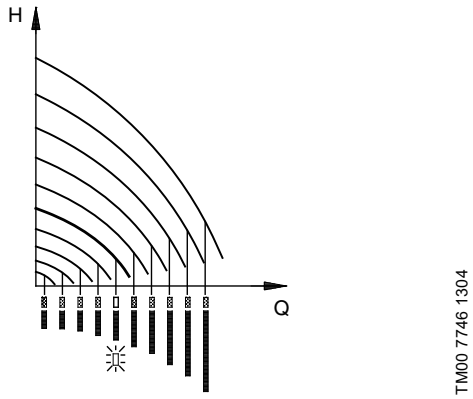

Fig. 21 Pump performance setting, control mode uncontrolled

9. Setting by means of R100

The pump is designed for wireless communication with the Grundfos remote control R100.

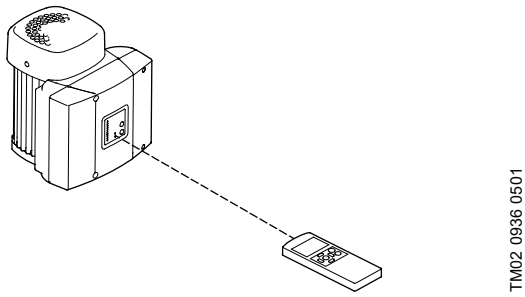

Fig. 22 R100 communicating with the pump via infra-red light

During communication, the R100 must be pointed at the control panel. When the R100 communicates with the pump, the red indicator light will flash rapidly. Keep pointing the R100 at the control panel until the red LED diode stops flashing.

The R100 offers setting and status displays for the pump.

The displays are divided into four parallel menus (see fig. 23):

0. GENERAL (see operating instructions for the R100)
1. OPERATION
2. STATUS
3. INSTALLATION

The figure above each individual display in fig. 23 refers to the section in which the display is described.

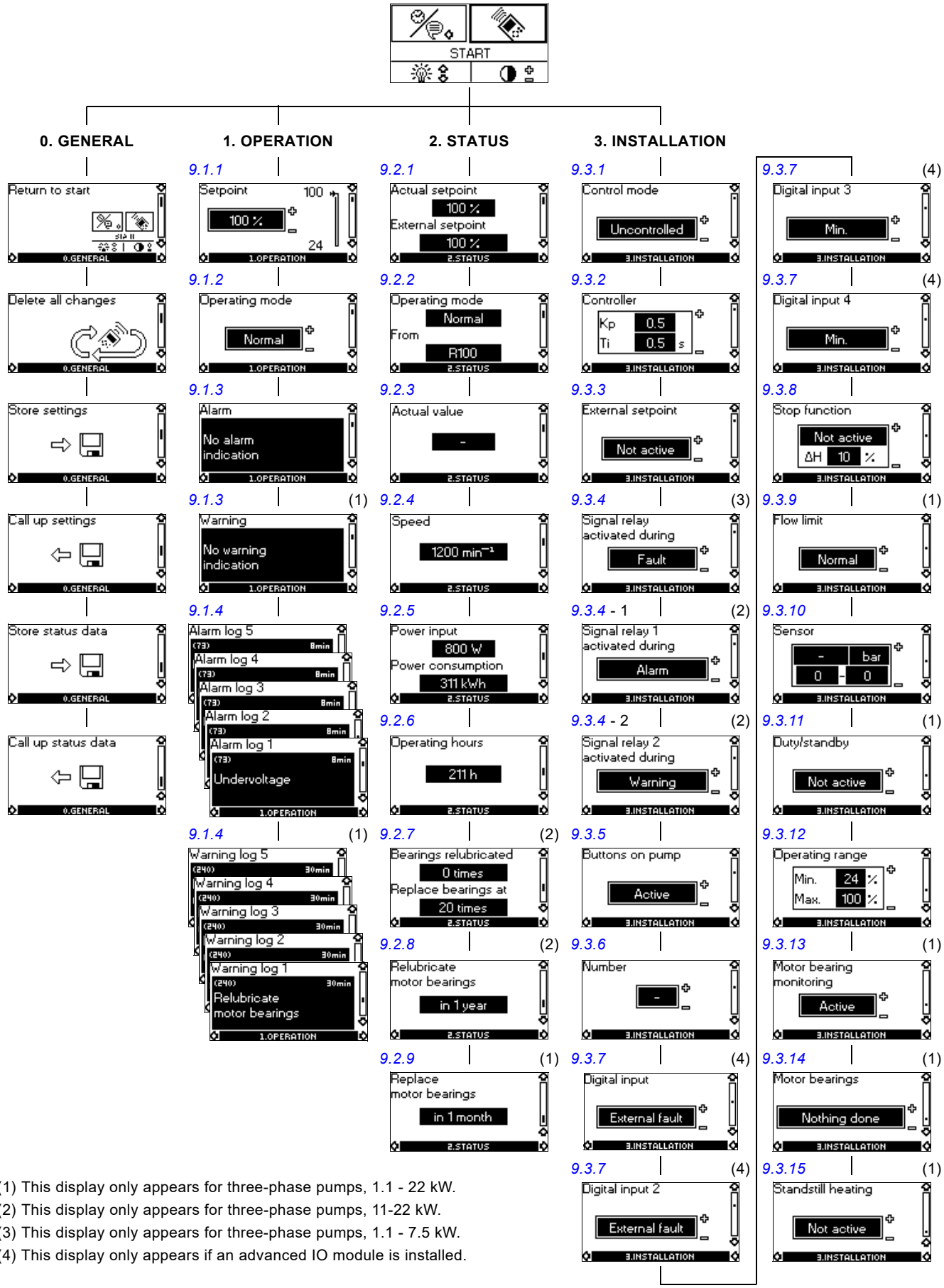

(1) This display only appears for three-phase pumps, 1.1 - 22 kW.
(2) This display only appears for three-phase pumps, 11-22 kW.
(3) This display only appears for three-phase pumps, 1.1 - 7.5 kW.
(4) This display only appears if an advanced IO module is installed.

Fig. 23 Menu overview

Displays in general

In the following explanation of the functions, one or two displays are shown.

One display

Pumps without or with factory-fitted sensor have the same function.

Two displays

Pumps without or with factory-fitted pressure sensor have different functions and factory settings.

9.1 Menu OPERATION

The first display in this menu is this:

9.1.1 Setpoint

Without sensor (uncontrolled)

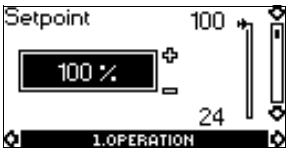

- Setpoint set
- Actual setpoint
- Actual value

Set the setpoint in %.

With pressure sensor (controlled)

- Setpoint set
- Actual setpoint
- Actual value

Set the desired pressure in bar.

In control mode uncontrolled, the setpoint is set in % of the maximum performance. The setting range will lie between the min. and max. curves.

In control mode controlled, the setting range is equal to the sensor measuring range.

If the pump is connected to an external setpoint signal, the value in this display will be the maximum value of the external setpoint signal. See section *13. External setpoint signal*.

Setpoint and external signal

The setpoint cannot be set if the pump is controlled via external signals (Stop, Min. curve or Max. curve). R100 will give this warning: External control!

Check if the pump is stopped via terminals 2-3 (open circuit) or set to min. or max. via terminals 1-3 (closed circuit).

See section *11. Priority of settings*.

Setpoint and bus communication

The setpoint cannot be set either if the pump is controlled from an external control system via bus communication. R100 will give this warning: Bus control!

To override bus communication, disconnect the bus connection.

See section *11. Priority of settings*.

9.1.2 Operating mode

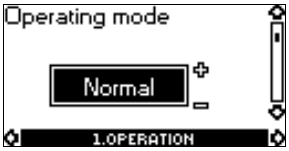

Set one of the following operating modes:

- Normal (duty)
- Stop
- Min.
- Max.

The operating modes can be set without changing the setpoint setting.

9.1.3 Fault indications

In E-pumps, faults may result in two types of indication: alarm or warning.

An "alarm" fault will activate an alarm indication in R100 and cause the pump to change operating mode, typically to stop. However, for some faults resulting in alarm, the pump is set to continue operating even if there is an alarm.

A "warning" fault will activate a warning indication in R100, but the pump will not change operating or control mode.

Note The indication, Warning, only applies to three-phase pumps.

Alarm

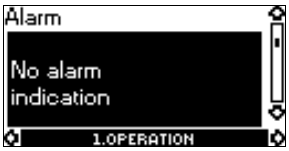

In case of alarm, the cause will appear in this display.

Possible causes:

- No alarm indication
- Too high motor temperature
- Undervoltage
- Mains voltage asymmetry (11-22 kW)
- Overvoltage
- Too many restarts (after faults)
- Overload
- Underload (only three-phase pumps)
- Sensor signal outside signal range
- Setpoint signal outside signal range
- External fault
- Duty/standby, Communication fault
- Dry running (only three-phase pumps)
- Other fault.

If the pump has been set up to manual restart, an alarm indication can be reset in this display if the cause of the fault has disappeared.

Warning (only three-phase pumps)

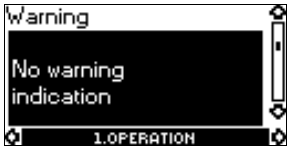

In case of warning, the cause will appear in this display.

Possible causes:

- No warning indication
- Sensor signal outside signal range
- Relubricate motor bearings, see section *19.2 Relubrication of motor bearings*
- Replace motor bearings, see section *19.3 Replacement of motor bearings*
- Replace varistor, see section *19.4 Replacement of varistor (only 11-22 kW)*.

A warning indication will disappear automatically once the fault has been remedied.

9.1.4 Fault log

For both fault types, alarm and warning, the R100 has a log function.

Alarm log

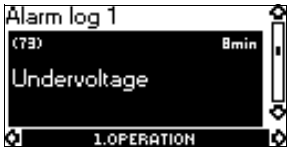

In case of "alarm" faults, the last five alarm indications will appear in the alarm log. "Alarm log 1" shows the latest fault, "Alarm log 2" shows the latest fault but one, etc.

The example above gives this information:

- the alarm indication "Undervoltage"
- the fault code (73)
- the number of minutes the pump has been connected to the power supply after the fault occurred, 8 min.

Warning log (only three-phase pumps)

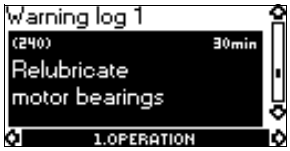

In case of "warning" faults, the last five warning indications will appear in the warning log. "Warning log 1" shows the latest fault, "Warning log 2" shows the latest fault but one, etc.

The example above gives this information:

- the warning indication "Relubricate motor bearings"
- the fault code (240)
- the number of minutes the pump has been connected to the power supply since the fault occurred, 30 min.

9.2 Menu STATUS

The displays appearing in this menu are status displays only. It is not possible to change or set values.

The displayed values are the values that applied when the last communication between the pump and the R100 took place. If a status value is to be updated, point the R100 at the control panel and press "OK". If a parameter, e.g. speed, should be called up continuously, press "OK" constantly during the period in which the parameter in question should be monitored.

The tolerance of the displayed value is stated under each display. The tolerances are stated as a guide in % of the maximum values of the parameters.

9.2.1 Actual setpoint

Without sensor (uncontrolled)

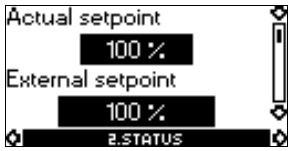

Tolerance: ± 2 %.

With pressure sensor (controlled)

Tolerance: ± 2 %.

This display shows the actual setpoint and the external setpoint in % of the range from minimum value to the setpoint set. See section *13. External setpoint signal*.

9.2.2 Operating mode

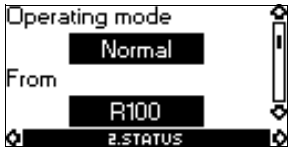

This display shows the actual operating mode:

- Normal (duty)
- Stop
- Min.
- Max.

Furthermore, it shows where this operating mode was selected:

- R100
- Pump
- Bus
- External
- Stop function.

For further details about the stop function, see section *9.3.8 Stop function*.

9.2.3 Actual value

Without sensor (uncontrolled)

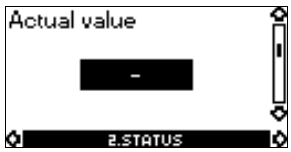

With pressure sensor (controlled)

This display shows the value actually measured by a connected sensor.

If no sensor is connected to the pump, "-" will appear in the display.

9.2.4 Speed

Tolerance: ± 5 %

The actual pump speed will appear in this display.

9.2.5 Power input and power consumption

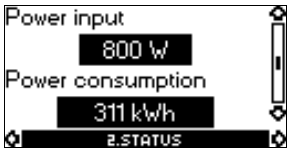

Tolerance: ± 10 %

This display shows the actual pump input power from the mains supply. The power is displayed in W or kW.

The pump power consumption can also be read from this display. The value of power consumption is an accumulated value calculated from the pump's birth and it cannot be reset.

9.2.6 Operating hours

Tolerance: ± 2 %

The value of operating hours is an accumulated value and cannot be reset.

9.2.7 Lubrication status of motor bearings (only 11-22 kW)

This display shows how many times the motor bearings have been relubricated and when to replace the motor bearings.

When the motor bearings have been relubricated, confirm this action in the INSTALLATION menu.

See section *9.3.14 Confirming relubrication/replacement of motor bearings (only three-phase pumps)*. When relubrication is confirmed, the figure in the above display will be increased by one.

9.2.8 Time till relubrication of motor bearings (only 11-22 kW)

This display shows when to relubricate the motor bearings. The controller monitors the operating pattern of the pump and calculates the period between bearing relubrications. If the operating pattern changes, the calculated time till relubrication may change as well.

The displayable values are these:

- in 2 years
- in 1 year
- in 6 months
- in 3 months
- in 1 month
- in 1 week
- Now!

9.2.9 Time till replacement of motor bearings (only three-phase pumps)

When the motor bearings have been relubricated a prescribed number of times stored in the controller, the display in section *9.2.8 Time till relubrication of motor bearings (only 11-22 kW)* will be replaced by the display below.

This display shows when to replace the motor bearings. The controller monitors the operating pattern of the pump and calculates the period between bearing replacements.

The displayable values are these:

- in 2 years
- in 1 year
- in 6 months
- in 3 months
- in 1 month
- in 1 week
- Now!

9.3 Menu INSTALLATION

9.3.1 Control mode

Without sensor (uncontrolled)

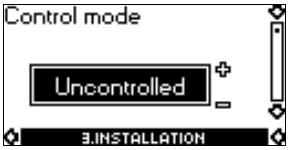

Select one of the following control modes (see fig. 16):

- Controlled
- Uncontrolled.

With pressure sensor (controlled)

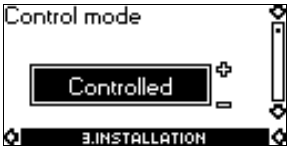

Select one of the following control modes (see fig. 16):

- Controlled
- Uncontrolled.

Note If the pump is connected to a bus, the control mode cannot be selected via the R100. See section *14. Bus signal*.

9.3.2 Controller

E-pumps have a factory default setting of gain (Kp) and integral time (Ti). However, if the factory setting is not the optimum setting, the gain and the integral time can be changed in the display below.

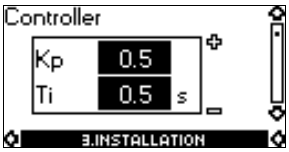

- The gain (Kp) can be set within the range from 0.1 to 20.
- The integral time (Ti) can be set within the range from 0.1 to 3600 s. If 3600 s is selected, the controller will function as a P controller.
- Furthermore, it is possible to set the controller to inverse control, meaning that if the setpoint is increased, the speed will be reduced. In the case of inverse control, the gain (Kp) must be set within the range from -0.1 to -20.

The table below shows the suggested controller settings:

System/application	Kp		Ti
	Heating system1)	Cooling system2)	
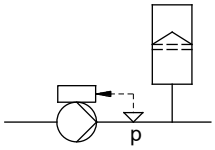	**0.5**		**0.5**
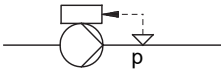	**0.1**		**0.5**
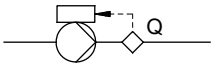	**0.5**		**0.5**
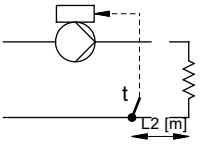	**0.5**	-0.5	10 + 5L2
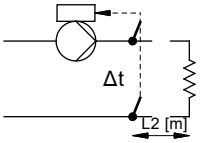	**0.5**		10 + 5L2
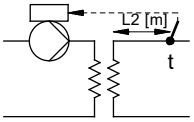	**0.5**	-0.5	30 + 5L2
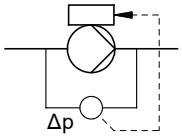	**0.5**		**0.5**
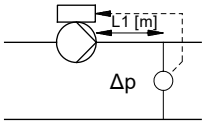	**0.5**		L1 less than 5 m: 0.5 L1 greater than 5 m: 3 L1 greater than 10 m: 5

1) Heating systems are systems in which an increase in pump performance will result in a rise in temperature at the sensor.

2) Cooling systems are systems in which an increase in pump performance will result in a drop in temperature at the sensor.

L1: distance in [m] between pump and sensor.

L2: distance in [m] between heat exchanger and sensor.

How to set the PI controller

For most applications, the factory setting of the controller constants Kp and Ti will ensure optimum pump operation. However, in some applications an adjustment of the controller may be needed.

Proceed as follows:

1. Increase the gain (Kp) until the motor becomes unstable. Instability can be seen by observing if the measured value starts to fluctuate. Furthermore, instability is audible as the motor starts hunting up and down.
   Some systems, such as temperature controls, are slow-reacting, meaning that it may be several minutes before the motor becomes unstable.
2. Set the gain (Kp) to half of the value which made the motor unstable. This is the correct setting of the gain.
3. Reduce the integral time (Ti) until the motor becomes unstable.
4. Set the integral time (Ti) to twice the value which made the motor unstable. This is the correct setting of the integral time.

General rules of thumb:

- If the controller is too slow-reacting, increase Kp.
- If the controller is hunting or unstable, dampen the system by reducing Kp or increasing Ti.

9.3.3 External setpoint

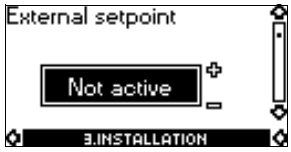

The input for external setpoint signal can be set to different signal types.

Select one of the following types:

- 0-10 V
- 0-20 mA
- 4-20 mA
- Not active.

If Not active is selected, the setpoint set by means of the R100 or on the control panel will apply.

If one of the signal types is selected, the actual setpoint is influenced by the signal connected to the external setpoint input. See section *13. External setpoint signal*.

9.3.4 Signal relay

Pumps of 0.37 - 7.5 kW have one signal relay. The factory setting of the relay will be Fault.

Pumps of 11-22 kW have two signal relays. Signal relay 1 is factory set to Alarm and signal relay 2 to Warning.

In one of the displays below, select in which one of three or six operating situations the signal relay should be activated.

0.37 - 7.5 kW

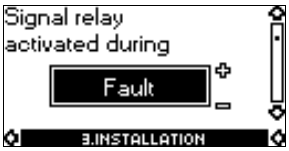

- Ready
- Fault
- Operation
- Pump running (only three-phase pumps, 0.55 - 7.5 kW)
- Warning (only three-phase pumps, 0.55 - 7.5 kW).

11-22 kW

- Ready
- Alarm
- Operation
- Pump running
- Warning
- Relubricate.

11-22 kW

- Ready
- Alarm
- Operation
- Pump running
- Warning
- Relubricate.

Note Fault and Alarm cover faults resulting in Alarm. Warning covers faults resulting in Warning. Relubricate covers only that one individual event. For distinction between alarm and warning, see section *9.1.3 Fault indications*.

For further information, see section *16. Indicator lights and signal relay*.

9.3.5 Buttons on pump

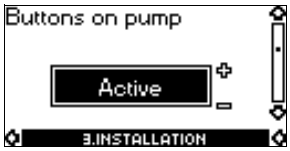

The operating buttons ⊛ and ⊛ on the control panel can be set to these values:

- Active
- Not active.

When set to Not active (locked), the buttons do not function. Set the buttons to Not active if the pump should be controlled via an external control system.

9.3.6 Pump number

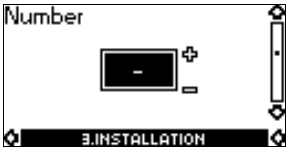

A number between 1 and 64 can be allocated to the pump. In the case of bus communication, a number must be allocated to each pump.

9.3.7 Digital inputs

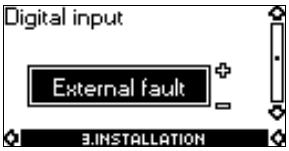

The digital inputs of the pump (terminal 1, fig. 5, 4 or 10) can be set to different functions.

Select one of the following functions:

- Min. (min. curve)
- Max. (max. curve)
- External fault
- Flow switch
- Dry running (from external sensor) (only three-phase pumps).

The selected function is activated by closing the contact between terminals 1 and 9, 1 and 10 or 1 and 11. See figures 5, 4 and 10.

See also section *12.2 Digital input*.

Min.

When the input is activated, the pump will operate according to the min. curve.

Max.

When the input is activated, the pump will operate according to the max. curve.

External fault

When the input is activated, a timer will be started. If the input is activated for more than 5 seconds, the pump will be stopped and a fault will be indicated. If the input is deactivated for more than 5 seconds, the fault condition will cease and the pump can only be restarted manually by resetting the fault indication.

Flow switch

When this function is selected, the pump will be stopped when a connected flow switch detects low flow.

It is only possible to use this function if the pump is connected to a pressure sensor.

If the input is activated for more than 5 seconds, the stop function incorporated in the pump will take over. See section *9.3.8 Stop function*.

Dry running (only three-phase pumps)

When this function is selected, lack of inlet pressure or water shortage can be detected. This requires the use of an accessory, such as these:

- a Grundfos Liqtec® dry-running sensor
- a pressure switch installed on the suction side of a pump
- a float switch installed on the suction side of a pump.

When lack of inlet pressure or water shortage (Dry running) is detected, the pump will be stopped. The pump cannot restart as long as the input is activated.

9.3.8 Stop function

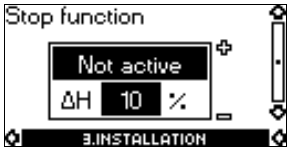

The stop function can be set to these values:

- Active
- Not active.

When the stop function is active, the pump will be stopped at very low flows. The causes are the following:

- avoid unnecessary heating of the pumped liquid
- reduce wear of the shaft seals
- reduce noise from operation.

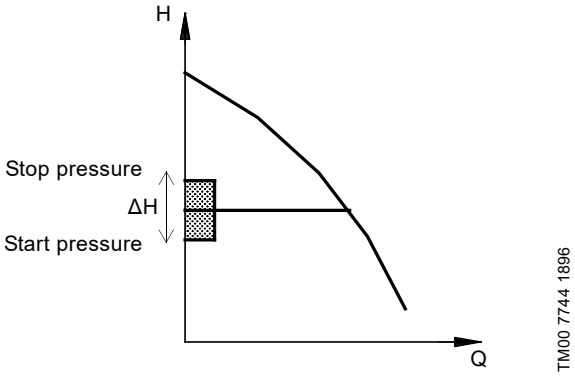

Fig. 24 Difference between start and stop pressures (ΔH)

ΔH is factory-set to 10 % of actual setpoint.

ΔH can be set within the range from 5 % to 30 % of actual setpoint.

Low flow can be detected in two different ways:

1. A built-in "low-flow detection function" which functions if the digital input is not set up for flow switch.
2. A flow switch connected to the digital input.

1. Low-flow detection function

The pump will check the flow regularly by reducing the speed for a short time. If there is no or only a small change in pressure, this means that there is low flow. The speed will be increased until the stop pressure (actual setpoint + 0.5 x ΔH) is reached and the pump will stop. When the pressure has fallen to the start pressure (actual setpoint - 0.5 x ΔH), the pump will restart.

When restarting, the pumps will react differently according to pump type:

Single-phase pumps

The pump will return to continuous operation at constant pressure and the pump will continue checking the flow regularly by reducing the speed for a short time.

Three-phase pumps

1. If the flow is higher than the low-flow limit, the pump will return to continuous operation at constant pressure.
2. If the flow is still lower than the low-flow limit, the pump will continue in start/stop operation. It will continue in start/stop operation until the flow is higher than the low-flow limit; when the flow is higher than the low-flow limit, the pump will return to continuous operation.

2. Flow switch

When the digital input is activated for more than 5 seconds because there is low flow, the speed will be increased until the stop pressure (actual setpoint + 0.5 x ΔH) is reached, and the pump will stop. When the pressure has fallen to start pressure, the pump will start again. If there is still no flow, the pump will quickly reach stop pressure and stop. If there is flow, the pump will continue operating according to the setpoint.

Operating conditions for the stop function

It is only possible to use the stop function if the system incorporates a pressure sensor, a non-return valve and a diaphragm tank.

Caution The non-return valve must always be installed before the pressure sensor. See figures 25 and 26.

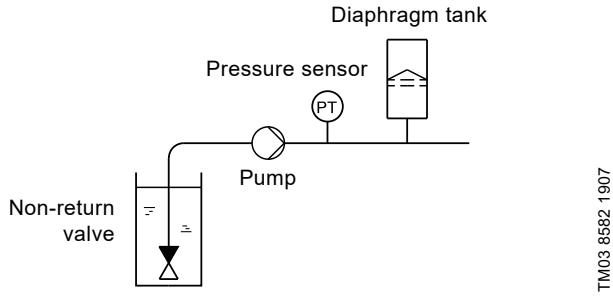

Fig. 25 Position of the non-return valve and pressure sensor in system with suction lift operation

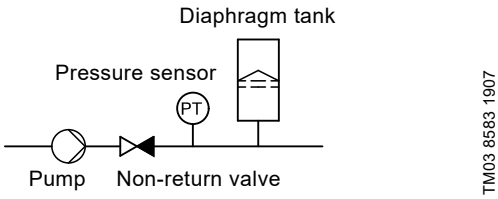

Fig. 26 Position of the non-return valve and pressure sensor in system with positive inlet pressure

Diaphragm tank

The stop function requires a diaphragm tank of a certain minimum size. The tank must be installed immediately after the pump and the precharge pressure must be 0.7 x actual setpoint.

Recommended diaphragm tank size:

Rated flow rate of pump [m^3/h]	CRE pump	Typical diaphragm tank size [litres]
0-6	1s, 1, 3, 5	8
7-24	10, 15, 20	18
25-40	32	50
41-70	45, 64	120
71-100	90	180

If a diaphragm tank of the above size is installed in the system, the factory setting of ΔH is the correct setting.

If the tank installed is too small, the pump will start and stop too often. This can be remedied by increasing ΔH.

9.3.9 Flow limit for the stop function (only three-phase pumps)

Note: Flow limit for the stop function only works if the system is not set up for flow switch.

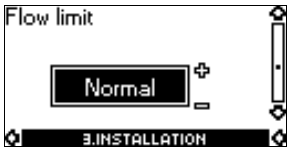

In order to set at which flow rate the system is to go from continuous operation at constant pressure to start/stop operation, select among these four values of which three are preconfigured flow limits:

- Low
- Normal
- High
- Custom.

The default setting of the pump is Normal, representing approx. 10 % of the rated flow rate of the pump.

If a lower flow limit than Normal is desired or the tank size is smaller than recommended, select Low.

If a higher flow than Normal is wanted or a large tank is used, set the limit to High.

The value Custom can be seen in R100 but it can only be set by means of the PC Tool E-products. Custom is for customised setup and optimising to the process.

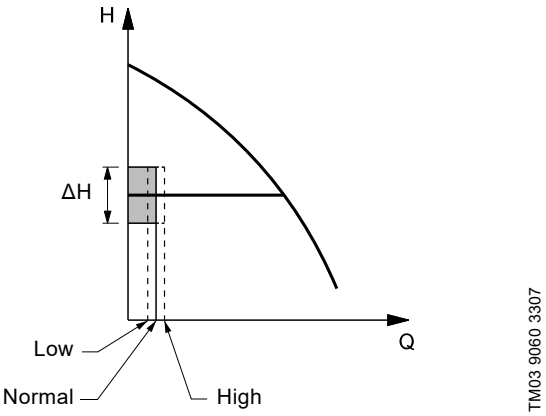

Fig. 27 Three preconfigured flow limits, Low, Normal and High

9.3.10 Sensor

Without sensor (uncontrolled)

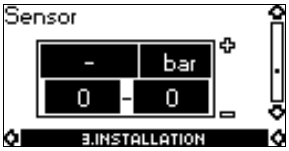

With pressure sensor (controlled)

The setting of the sensor is only relevant in the case of controlled operation.

Select among the following values:

- Sensor output signal
  0-10 V
  0-20 mA
  4-20 mA,
- Unit of measurement of sensor:
  bar, mbar, m, kPa, psi, ft, m^3/h, m^3/s, l/s, gpm, °C, °F, %
- Sensor measuring range.

9.3.11 Duty/standby (only three-phase pumps)

The duty/standby function applies to two pumps connected in parallel and controlled via GENIbus.

The duty/standby function can be set to these values:

- Active
- Not active.

When the function is set to Active, the following applies:

- Only one pump is running at a time.
- The stopped pump (standby) will automatically be cut in if the running pump (duty) has a fault. A fault will be indicated.
- Changeover between the duty pump and the standby pump will take place every 24 hours.

Activate the duty/standby function as follows:

1. Connect one of the pumps to the mains supply.
   Set the duty/standby function to Not active.
   Using the R100, make the necessary settings in menu OPERATION and INSTALLATION.
2. Set the operating mode to Stop in menu OPERATION.
3. Connect the other pump to the mains supply.
   Using the R100, make the necessary settings in menu OPERATION and INSTALLATION.
   Set the duty/standby function to Active.

The running pump will search for the other pump and automatically set the duty/standby function of this pump to Active. If it cannot find the other pump, a fault will be indicated.

9.3.12 Operating range

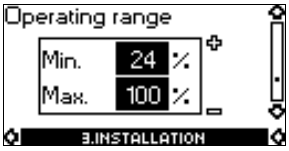

How to set the operating range:

- Set the min. curve within the range from max. curve to 12 % of maximum performance. The pump is factory-set to 24 % of maximum performance.
- Set the max. curve within the range from maximum performance (100 %) to min. curve.

The area between the min. and max. curves is the operating range.

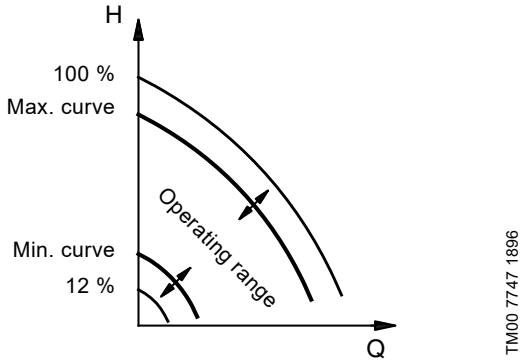

Fig. 28 Setting of the min. and max. curves in % of maximum performance

9.3.13 Motor bearing monitoring (only three-phase pumps)

The motor bearing monitoring function can be set to these values:

- Active
- Not active.

When the function is set to Active, a counter in the controller will start counting the mileage of the bearings. See section *9.2.7 Lubrication status of motor bearings (only 11-22 kW)*.

Note: The counter will continue counting even if the function is switched to Not active, but a warning will not be given when it is time for relubrication. When the function is switched to Active again, the accumulated mileage will again be used to calculate the relubrication time.

9.3.14 Confirming relubrication/replacement of motor bearings (only three-phase pumps)

This function can be set to these values:

- Relubricated (only 11-22 kW)
- Replaced
- Nothing done.

When the bearing monitoring function is Active, the controller will give a warning indication when the motor bearings are due to be relubricated or replaced. See section *9.1.3 Fault indications*.

When the motor bearings have been relubricated or replaced, confirm this action in the above display by pressing "OK".

Note: Relubricated cannot be selected for a period of time after confirming relubrication.

9.3.15 Standstill heating (only three-phase pumps)

The standstill heating function can be set to these values:

- Active
- Not active.

When the function is set to Active, an AC voltage will be applied to the motor windings. The applied voltage will ensure that sufficient heat is generated to avoid condensation in the motor.

10. Setting by means of PC Tool E-products

Special setup requirements differing from the settings available via the R100 require the use of Grundfos PC Tool E-products. This again requires the assistance of a Grundfos service technician or engineer. Contact your local Grundfos company for more information.

11. Priority of settings

The priority of settings depends on two factors:

1. control source
2. settings.

1. Control source

- Control panel
- R100
- External signals (external setpoint signal, digital inputs, etc.).
- Communication from another control system via bus

2. Settings

- Operating mode Stop
- Operating mode Max. (Max. curve)
- Operating mode Min. (Min. curve)
- Setpoint setting.

An E-pump can be controlled by different control sources at the same time, and each of these sources can be set differently. Consequently, it is necessary to set an order of priority of the control sources and the settings.

Note: If two or more settings are activated at the same time, the pump will operate according to the function with the highest priority.

Priority of settings without bus communication

Priority	Control panel or R100	External signals
1	Stop	
2	Max.	
3		Stop
4		Max.
5	Min.	Min.
6	Setpoint setting	Setpoint setting

Example

If the E-pump has been set to operating mode Max. (Max. frequency) via an external signal, such as digital input, the control panel or R100 can only set the E-pump to operating mode Stop.

Priority of settings with bus communication

Priority	Control panel or R100	External signals	Bus communication
1	Stop		
2	Max.		
3		Stop	Stop
4			Max.
5			Min.
6			Setpoint setting

Example

If the E-pump is operating according to a setpoint set via bus communication, the control panel or R100 can set the E-pump to operating mode Stop or Max., and the external signal can only set the E-pump to operating mode Stop.

12. External forced-control signals

The pump has inputs for external signals for these forced-control functions:

- Start/stop of pump
- Digital function.

12.1 Start/stop input

Functional diagram: Start/stop input:

Start/stop (terminals 2 and 3)		
	H, Q	**Normal duty**
	H, Q	**Stop**

12.2 Digital input

By means of the R100, one of the following functions can be selected for the digital input:

- Normal duty
- Min. curve
- Max. curve
- External fault
- Flow switch
- Dry running.

Functional diagram: Input for digital function

Digital function (terminals 1 and 9)		
	H, Q	**Normal duty**
	H, Q	**Min. curve**
	H, Q	**Max. curve**
	H, 5 s, Q	**External fault**
	H, 5 s, Q	**Flow switch**
	H, Q	**Dry running**

13. External setpoint signal

The setpoint can be remote-set by connecting an analogue signal transmitter to the input for the setpoint signal (terminal 4).

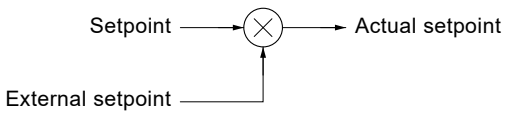

TM03 8601 2007

Fig. 29 Actual setpoint as a product (multiplied value) of setpoint and external setpoint

Select the actual external signal, 0-10 V, 0-20 mA, 4-20 mA, via the R100. See section *9.3.3 External setpoint*.

If control mode uncontrolled is selected by means of the R100, the pump can be controlled by any controller.

In control mode controlled, the setpoint can be set externally within the range from the lower value of the sensor measuring range to the setpoint set on the pump or by means of the R100.

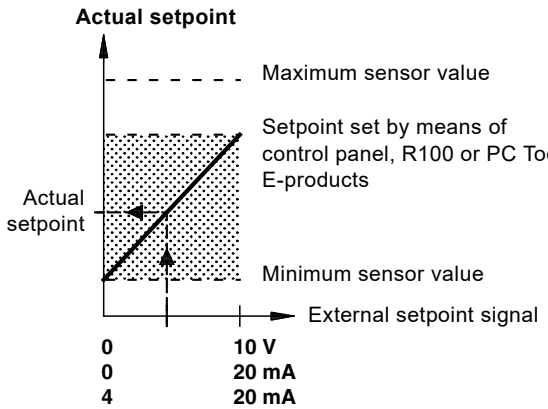

TM02 8988 1304

Fig. 30 Relation between the actual setpoint and the external setpoint signal in control mode controlled

Example

At a minimum sensor value of 0 bar, a setpoint set of 3 bar and an external setpoint of 80 %, the actual setpoint will be as follows:

Actual setpoint = (setpoint - minimum sensor value) x % external setpoint + minimum sensor value
= (3 - 0) x 80 % + 0
= 2.4 bar

In control mode uncontrolled, the setpoint can be set externally within the range from the min. curve to the setpoint set on the pump or by means of the R100.

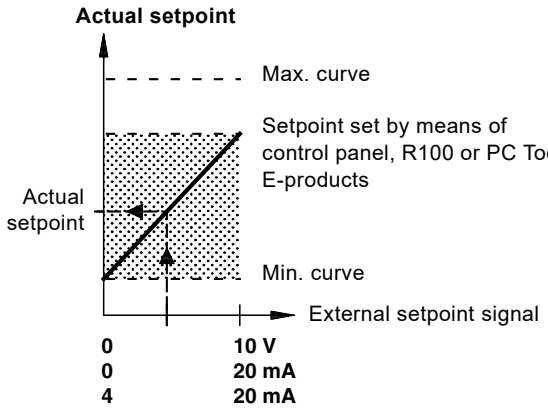

TM02 8988 1304

Fig. 31 Relation between the actual setpoint and the external setpoint signal in control mode uncontrolled

14. Bus signal

The pump supports serial communication via an RS-485 input. The communication is carried out according to the Grundfos bus protocol, GENIbus protocol, and enables connection to a building management system or another external control system.

Operating parameters, such as setpoint, operating mode, etc. can be remote-set via the bus signal. At the same time, the pump can provide status information about important parameters, such as actual value of control parameter, input power, fault indications, etc.

Contact Grundfos for further details.

Note: If a bus signal is used, the number of settings available via the R100 will be reduced.

15. Other bus standards

Grundfos offers various bus solutions with communication according to other standards.

Contact Grundfos for further details.

16. Indicator lights and signal relay

The operating condition of the pump is indicated by the green and red indicator lights fitted on the pump control panel and inside the terminal box. See figures 32 and 33.

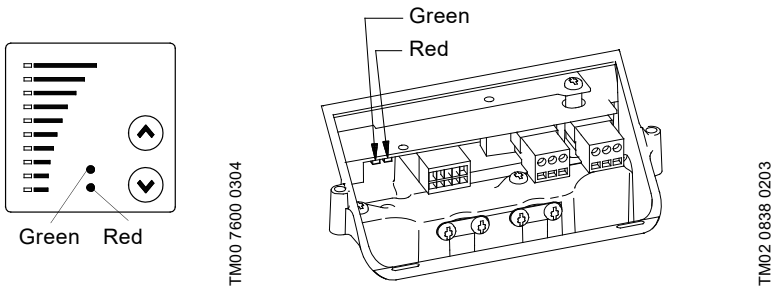

Fig. 32 Position of indicator lights on single-phase pumps

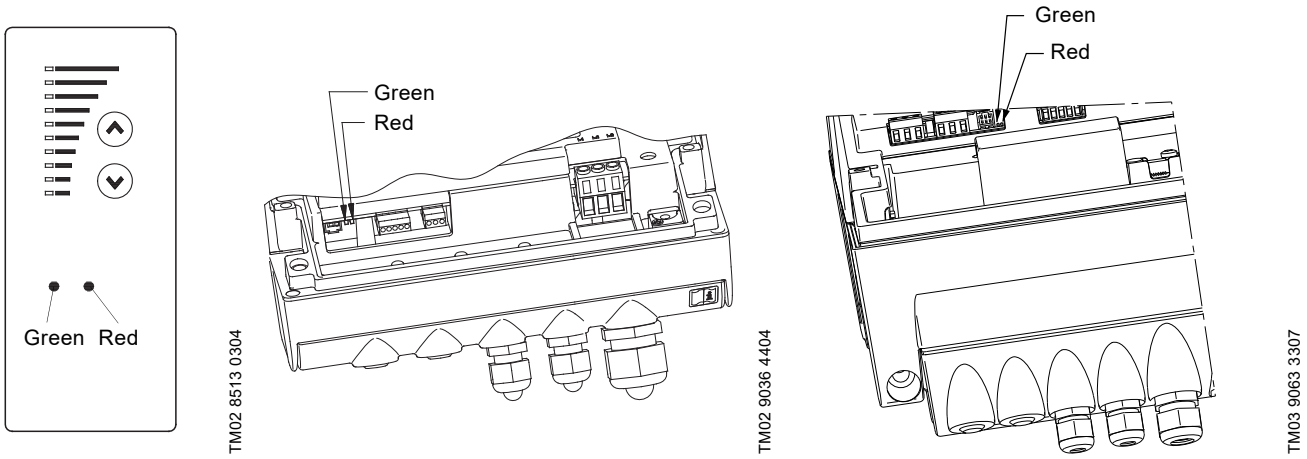

Fig. 33 Position of indicator lights on three-phase pumps

Besides, the pump incorporates an output for a potential-free signal via an internal relay.

For signal relay output values, see section *9.3.4 Signal relay*.

The functions of the two indicator lights and the signal relay are as shown in the following table:

Indicator lights		Signal relay activated during:				
Fault (red)	**Operation (green)**	**Fault/Alarm, Warning and Relubricate**	**Operating**	**Ready**	**Pump running**	**Description**
Off	Off					The power supply has been switched off.
Off	Permanently on					The pump is operating.
Off	Permanently on					The pump is stopped by the stop function.
Off	Flashing					The pump has been set to stop.
Permanently on	Off					The pump has stopped because of a Fault/Alarm or is running with a Warning or Relubricate indication. If the pump was stopped, restarting will be attempted (it may be necessary to restart the pump by resetting the Fault indication). If the cause is "external fault", the pump must be restarted manually by resetting the Fault indication.
Permanently on	Permanently on					The pump is operating, but it has or has had a Fault/Alarm allowing the pump to continue operation or it is operating with a Warning or Relubricate indication. If the cause is "sensor signal outside signal range", the pump will continue operating according to the max. curve and the fault indication cannot be reset until the signal is inside the signal range. If the cause is "setpoint signal outside signal range", the pump will continue operating according to the min. curve and the fault indication cannot be reset until the signal is inside the signal range.
Permanently on	Flashing					The pump has been set to stop, but it has been stopped because of a Fault.

Resetting of fault indication

A fault indication can be reset in one of the following ways:

- Briefly press the button ⊛ or ⊛ on the pump. This will not change the setting of the pump.
  A fault indication cannot be reset by means of ⊛ or ⊛ if the buttons have been locked.
- Switch off the power supply until the indicator lights are off.
- Switch the external start/stop input off and then on again.
- Use the R100. See section *9.1.3 Fault indications*.

When the R100 communicates with the pump, the red indicator light will flash rapidly.

17. Insulation resistance

0.37 - 7.5 kW

Caution

Do not measure the insulation resistance of motor windings or an installation incorporating E-pumps using high voltage megging equipment, as this may damage the built-in electronics.

11-22 kW

Caution

Do not measure the insulation resistance of an installation incorporating E-pumps using high voltage megging equipment, as this may damage the built-in electronics.

The motor conductors can be disconnected separately and the insulation resistance of the motor windings can be tested.

18. Emergency operation (only 11-22 kW)

Warning

Never make any connections in the pump terminal box unless all electric supply circuits have been switched off for at least 5 minutes.

Note for instance that the signal relay may be connected to an external supply which is still connected when the mains supply is disconnected.

If the pump is stopped and you cannot start the pump immediately after normal remedies, the reason could be a faulty frequency converter. If this is the case it is possible to maintain emergency operation of the pump.

Before change over to emergency operation we recommend you to:

- Check that the mains supply is OK.
- Check that control signals are working (start/stop signals).
- Check that all alarms are reset.
- Make a resistance test on the motor windings (disconnect the motor conductors from the terminal box).

If the pump remains stopped it is possible that the frequency converter is faulty.

To establish emergency operation proceed as follows:

1. Disconnect the three mains conductors, L1, L2, L3, from the terminal box, but leave the protective earth conductor(s) in position on the PE terminal(s).

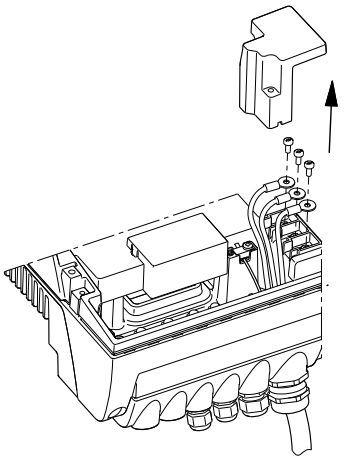

TM03 8607 2007

2. Disconnect the motor supply conductors, U/W1, V/U1, W/V1, from the terminal box.

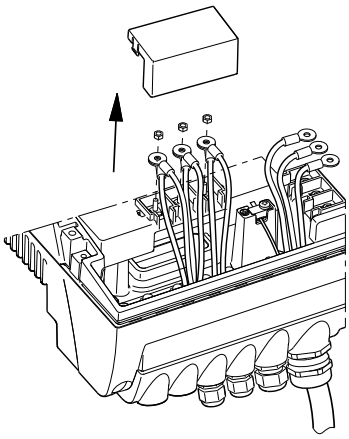

TM03 9120 3407

3. Connect the conductors as shown in fig. 34.

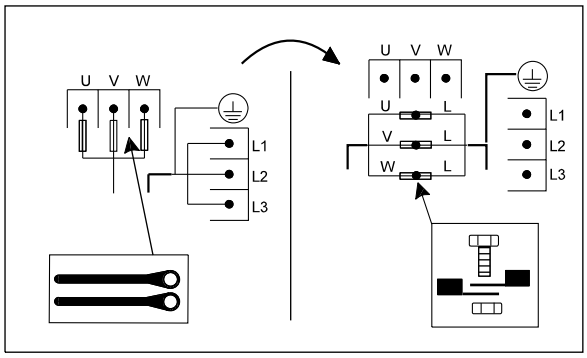

TM04 0018 4807

Fig. 34 How to switch an E-pump from normal operation to emergency operation

Use the screws from the mains terminals and the nuts from the motor terminals.

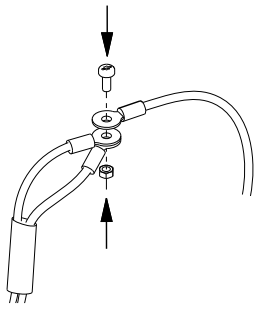

TM03 9121 3407

4. Insulate the three conductors from each other by means of insulating tape or the like.

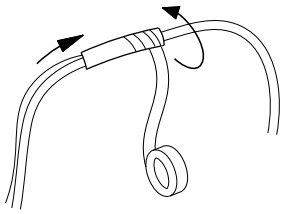

TM03 9122 3407

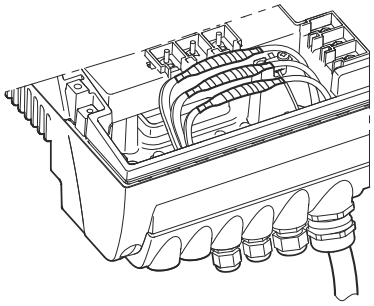

TM03 9123 3407

Warning

Do not bypass the frequency converter by connecting the mains conductors to the U, V and W terminals.

This may cause hazardous situations for personnel as the high voltage potential of the mains may be transferred to touchable components in the terminal box.

Caution Check the direction of rotation when starting up after switching to emergency operation.

19. Maintenance and service

19.1 Cleaning of the motor

Keep the motor cooling fins and fan blades clean to ensure sufficient cooling of the motor and electronics.

19.2 Relubrication of motor bearings

1.1 - 7.5 kW pumps

The motor bearings are of the closed type and greased for life. The bearings cannot be relubricated.

11-22 kW pumps

The motor bearings are of the open type and must be relubricated regularly.

The motor bearings are prelubricated on delivery. The built-in bearing monitoring function will give a warning indication on the R100 when the motor bearings are due to be relubricated.

Note Before relubrication, remove the bottom plug in the motor flange and the plug in the bearing cover to ensure that old and excess grease can escape.

When relubricating the first time, use the double quantity of grease as the lubricating channel is still empty.

Frame size	Quantity of grease [ml]	
	Drive end	Non-drive end
MGE 160	13	13
MGE 180	15	15

The recommended grease type is a polycarbamide-based lubricating grease.

19.3 Replacement of motor bearings

11-22 kW motors have built-in bearing monitoring function which will give a warning indication on the R100 when the motor bearings are due to be replaced.

19.4 Replacement of varistor (only 11-22 kW)

The varistor protects the pump against mains voltage transients. If voltage transients occur, the varistor will be worn over time and need to be replaced. The more transients, the more quickly the varistor will be worn. When it is time to replace the varistor, R100 and PC Tool E-products will indicate this as a warning.

A Grundfos technician is required for replacement of the varistor. Contact your local Grundfos company for assistance.

19.5 Service parts and service kits

For further information on service parts and service kits, visit www.grundfos.com, select country, select WebCAPS.

20. Technical data - three-phase pumps, 1.1 - 7.5 kW

20.1 Supply voltage

3 x 380-480 V - 10 %/+ 10 %, 50/60 Hz - 2 %/+ 2 %, PE.

Cable: Max 10 mm^2 / 8 AWG.

Use min. 70 °C copper conductors only.

Recommended fuse sizes

Motor sizes from 1.1 to 5.5 kW: Max. 16 A.

Motor size 7.5 kW: Max. 32 A.

Standard as well as quick-blow or slow-blow fuses may be used.

20.2 Overload protection

The overload protection of the E-motor has the same characteristic as an ordinary motor protector. As an example, the E-motor can stand an overload of 110 % of Inom for 1 min.

20.3 Leakage current

Motor size [kW]	Leakage current [mA]
1.1 to 3.0 (supply voltage less than 460 V)	less than 3.5
1.1 to 3.0 (supply voltage greater than 460 V)	less than 5
4.0 - 5.5	less than 5
7.5	less than 10

The leakage currents are measured in accordance with EN 61800-5-1.

20.4 Inputs/output

Start/stop

External potential-free contact.

Voltage: 5 VDC.

Current: less than 5 mA.

Screened cable: 0.5 - 1.5 mm^2 / 28-16 AWG.

Digital

External potential-free contact.

Voltage: 5 VDC.

Current: less than 5 mA.

Screened cable: 0.5 - 1.5 mm^2 / 28-16 AWG.

Setpoint signals

- Potentiometer
  0-10 VDC, 10 kΩ (via internal voltage supply).
  Screened cable: 0.5 - 1.5 mm^2 / 28-16 AWG.
  Maximum cable length: 100 m.
- Voltage signal
  0-10 VDC, Ri greater than 50 kΩ.
  Tolerance: + 0 %/- 3 % at maximum voltage signal.
  Screened cable: 0.5 - 1.5 mm^2 / 28-16 AWG.
  Maximum cable length: 500 m.
- Current signal
  DC 0-20 mA / 4-20 mA, Ri equal to 175 Ω.
  Tolerance: + 0 %/- 3 % at maximum current signal.
  Screened cable: 0.5 - 1.5 mm^2 / 28-16 AWG.
  Maximum cable length: 500 m.

Sensor signals

- Voltage signal
  0-10 VDC, Ri greater than 50 kΩ (via internal voltage supply).
  Tolerance: + 0 %/- 3 % at maximum voltage signal.
  Screened cable: 0.5 - 1.5 mm^2 / 28-16 AWG.
  Maximum cable length: 500 m.
- Current signal
  DC 0-20 mA / 4-20 mA, Ri equal to 175 Ω.
  Tolerance: + 0 %/- 3 % at maximum current signal.
  Screened cable: 0.5 - 1.5 mm^2 / 28-16 AWG.
  Maximum cable length: 500 m.

Internal power supplies

- 10 V power supply for external potentiometer:
  Max. load: 2.5 mA.
  Short-circuit-protected.
- 24 V power supply for sensors:
  Max. load: 40 mA.
  Short-circuit-protected.

Signal relay output

Potential-free changeover contact.

Maximum contact load: 250 VAC, 2 A, cos φ 0.3 - 1.

Minimum contact load: 5 VDC, 10 mA.

Screened cable: 0.5 - 2.5 mm^2 / 28-12 AWG.

Maximum cable length: 500 m.

Bus input

Grundfos bus protocol, GENIbus protocol, RS-485.

Screened 3-core cable: 0.2 - 1.5 mm^2 / 28-16 AWG.

Maximum cable length: 500 m.

21. Technical data - three-phase pumps, 11-22 kW

21.1 Supply voltage

3 x 380-480 V - 10 %/+ 10 %, 50/60 Hz - 3 %/+ 3 %, PE.

Cable: Max. 10 mm^2 / 8 AWG.

Use min. 70 °C copper conductors only.

Recommended fuse sizes

Motor size [kW]	Max. [A]
11	32
15	36
18.5	43
22	51

Standard as well as quick-blow or slow-blow fuses may be used.

21.2 Overload protection

The overload protection of the E-motor has the same characteristic as an ordinary motor protector. As an example, the E-motor can stand an overload of 110 % of Inom for 1 min.

21.3 Leakage current

Earth leakage current greater than 10 mA.

The leakage currents are measured in accordance with EN 61800-5-1.

21.4 Inputs/output

Start/stop

External potential-free contact.

Voltage: 5 VDC.

Current: less than 5 mA.

Screened cable: 0.5 - 1.5 mm^2 / 28-16 AWG.

Digital

External potential-free contact.

Voltage: 5 VDC.

Current: less than 5 mA.

Screened cable: 0.5 - 1.5 mm^2 / 28-16 AWG.

Setpoint signals

- Potentiometer
  0-10 VDC, 10 kΩ (via internal voltage supply).
  Screened cable: 0.5 - 1.5 mm^2 / 28-16 AWG.
  Maximum cable length: 100 m.
- Voltage signal
  0-10 VDC, Ri greater than 50 kΩ.
  Tolerance: + 0 %/- 3 % at maximum voltage signal.
  Screened cable: 0.5 - 1.5 mm^2 / 28-16 AWG.
  Maximum cable length: 500 m.
- Current signal
  DC 0-20 mA / 4-20 mA, Ri equal to 250 Ω.
  Tolerance: + 0 %/- 3 % at maximum current signal.
  Screened cable: 0.5 - 1.5 mm^2 / 28-16 AWG.
  Maximum cable length: 500 m.

Sensor signals

- Voltage signal
  0-10 VDC, Ri greater than 50 kΩ (via internal voltage supply).
  Tolerance: + 0 %/- 3 % at maximum voltage signal.
  Screened cable: 0.5 - 1.5 mm^2 / 28-16 AWG.
  Maximum cable length: 500 m.
- Current signal
  DC 0-20 mA / 4-20 mA, Ri equal to 250 Ω.
  Tolerance: + 0 %/- 3 % at maximum current signal.
  Screened cable: 0.5 - 1.5 mm^2 / 28-16 AWG.
  Maximum cable length: 500 m.

Internal power supplies

- 10 V power supply for external potentiometer:
  Max. load: 2.5 mA.
  Short-circuit-protected.
- 24 V power supply for sensors:
  Max. load: 40 mA.
  Short-circuit-protected.

Signal relay output

Potential-free changeover contact.

Maximum contact load: 250 VAC, 2 A, cos φ 0.3 - 1.

Minimum contact load: 5 VDC, 10 mA.

Screened cable: 0.5 - 2.5 mm^2 / 28-12 AWG.

Maximum cable length: 500 m.

Bus input

Grundfos bus protocol, GENIbus protocol, RS-485.

Screened 3-core cable: 0.2 - 1.5 mm^2 / 28-16 AWG.

Maximum cable length: 500 m.

21.5 Other technical data

EMC (electromagnetic compatibility to EN 61800-3)

Motor [kW]	Emission/immunity
1.1 1.5 2.2 3.0 4.0 5.5 7.5	**Emission:** The motors may be installed in residential areas (first environment), unrestricted distribution, corresponding to CISPR11, group 1, class B. **Immunity:** The motors fulfil the requirements for both the first and second environment.
11 15 18.5 22	**Emission:** The motors are category C3, corresponding to CISPR11, group 2, class A, and may be installed in industrial areas (second environment). If equipped with an external Grundfos EMC filter, the motors are category C2, corresponding to CISPR11, group 1, class A, and may be installed in residential areas (first environment). Warning When the motors are installed in residential areas, supplementary measures may be required as the motors may cause radio interference. Motor sizes 11, 18.5 and 22 kW comply with EN 61000-3-12 provided that the short-circuit power at the interface point between the user's electrical installation and the public power supply network is greater than or equal to the values stated below. It is the responsibility of the installer or user to ensure, by consultation with the power supply network operator, if necessary, that the motor is connected to a power supply with a short-circuit power greater than or equal to these values: **Motor size [kW] / Short-circuit power [kVA]** 11 / 1500 15 / - 18.5 / 2700 22 / 3000 Note: 15 kW motors do not comply with EN 61000-3-12. By installing an appropriate harmonic filter between the motor and the power supply, the harmonic current content will be reduced. In this way, the 15 kW motor will comply with EN 61000-3-12. **Immunity:** The motors fulfil the requirements for both the first and second environment.

Contact Grundfos for further information.

Enclosure class

- Three-phase pumps, 1.1 - 7.5 kW: IP55 (IEC 34-5).
- Three-phase pumps, 11-22 kW: IP55 (IEC 34-5).

Insulation class

F (IEC 85).

Ambient temperature

During operation:

- Min. -20 °C
- Max. +40 °C without derating.

During storage/transport:

- -30 to +60 °C (0.37 - 7.5 kW)
- -25 to +70 °C (11-22 kW).

Relative air humidity

Maximum 95 %.

Sound pressure level

Three-phase pumps

Motor [kW]	Speed stated on nameplate [min^{-1}]	Sound pressure level [dB(A)]
1.1	2800-3000	60
	3400-3600	65
1.5	2800-3000	65
	3400-3600	70
2.2	2800-3000	65
	3400-3600	70
3.0	2800-3000	65
	3400-3600	70
4.0	2800-3000	70
	3400-3600	75
5.5	2800-3000	75
	3400-3600	80
7.5	2800-3000	65
	3400-3600	69
11	2800-3000	63
	3400-3600	68
15	2800-3000	64
	3400-3600	68
18.5	2800-3000	66
	3400-3600	70
22	2800-3000	66
	3400-3600	70

22. Disposal

This product or parts of it must be disposed of in an environmentally sound way:

1. Use the public or private waste collection service.
2. If this is not possible, contact the nearest Grundfos company or service workshop.

1. Installation in the USA and Canada

Note

In order to maintain the UL/cURus approval, follow these additional installation instructions.
The UL approval is according to UL508C.

1.1 Electrical connection

1.1.1 Conductors

Use 140/167 °F (60/75 °C) copper conductors only.

1.1.2 Torques

Power terminals

Motor size [kW]	Thread size	Torque [Nm]
Up to 7.5 kW	M4	2.35
11-22 kW	M4	Min. 2.2 Max. 2.8

Relay, M2.5: 0.5 Nm.
Input control, M2: 0.2 Nm.

1.1.3 Line reactors

Max line reactor size must not exceed 2 mH.

1.1.4 Fuse size/circuit breaker

If a short circuit happens the pump can be used on a mains supply delivering not more than 5000 RMS symmetrical amperes, 600 V maximum.

Fuses

When the pump is protected by fuses they must be rated for 480 V. Maximum sizes are stated in table below.

Motors up to and including 7.5 kW require class K5 UL-listed fuses. Any UL-listed fuse can be used for motors from 11 to 22 kW.

Circuit breaker

When the pump is protected by a circuit breaker this must be rated for a maximum voltage of 480 V. The circuit breaker must be of the "Inverse time" type.
The interrupting rating (RMS symmetrical amperes) must not be less than the values stated in table below.

USA - hp

2-pole	4-pole	Fuse size	Circuit breaker type/model
1	1	25 A	25 A / Inverse time
1.5	1.5	25 A	25 A / Inverse time
2	2	25 A	25 A / Inverse time
3	3	25 A	25 A / Inverse time
5	5	40 A	40 A / Inverse time
7.5	-	40 A	40 A / Inverse time
10	7.5	50 A	50 A / Inverse time
15	15	80 A	80 A / Inverse time
20	20	110 A	110 A / Inverse time
25	25	125 A	125 A / Inverse time
30	-	150 A	150 A / Inverse time

Europe - kW

2-pole	4-pole	Fuse size	Circuit breaker type/model
-	0.55	25 A	25 A / Inverse time
0.75	0.75	25 A	25 A / Inverse time
1.1	1.1	25 A	25 A / Inverse time
1.5	1.5	25 A	25 A / Inverse time
2.2	2.2	25 A	25 A / Inverse time
3	3	25 A	25 A / Inverse time
4	4	40 A	40 A / Inverse time
5.5	-	40 A	40 A / Inverse time
7.5	5.5	50 A	50 A / Inverse time
11	11	80 A	80 A / Inverse time
15	15	110 A	110 A / Inverse time
18.5	18.5	125 A	125 A / Inverse time
22	-	150 A	150 A / Inverse time

1.1.5 Overload protection

Degree of overload protection provided internally by the drive, in percent of full-load current: 102 %.

1.2 General considerations

For installation in humid environment and fluctuating temperatures, it is recommended to keep the pump connected to the power supply continuously. This will prevent moisture and condensation build-up in the terminal box.

Start and stop must be done via the start/stop digital input (terminal 2-3).

GB: EC/EU declaration of conformity

We, Grundfos, declare under our sole responsibility that the products CRE, CRIE, CRNE, CRTE, SPKE, MTRE, CME, BMS hp, to which the declaration below relates, are in conformity with the Council Directives listed below on the approximation of the laws of the EC/EU member states.

CZ: Prohlášení o shodě EU

My firma Grundfos prohlašujeme na svou plnou odpovědnost, že výrobky CRE, CRIE, CRNE, CRTE, SPKE, MTRE, CME, BMS hp, na které se toto prohlášení vztahuje, jsou v souladu s níže uvedenými ustanoveními směrnice Rady pro sblížení právních předpisů členských států Evropského společenství.

DE: EG-/EU-Konformitätserklärung

Wir, Grundfos, erklären in alleiniger Verantwortung, dass die Produkte CRE, CRIE, CRNE, CRTE, SPKE, MTRE, CME, BMS hp, auf die sich diese Erklärung bezieht, mit den folgenden Richtlinien des Rates zur Angleichung der Rechtsvorschriften der EG-/EU-Mitgliedsstaaten übereinstimmen.

GR: Δήλωση συμμόρφωσης ΕΚ/ΕΕ

Εμείς, η Grundfos, δηλώνουμε με αποκλειστικά δική μας ευθύνη ότι τα προϊόντα CRE, CRIE, CRNE, CRTE, SPKE, MTRE, CME, BMS hp, στα οποία αναφέρεται η παρακάτω δήλωση, συμμορφώνονται με τις παρακάτω Οδηγίες του Συμβουλίου περί προσέγγισης των νομοθεσιών των κρατών μελών της ΕΚ/ΕΕ.

FR: Déclaration de conformité CE/EU

Nous, Grundfos, déclarons sous notre seule responsabilité, que les produits CRE, CRIE, CRNE, CRTE, SPKE, MTRE, CME, BMS hp, auxquels se réfère cette déclaration, sont conformes aux Directives du Conseil concernant le rapprochement des législations des États membres CE/UE relatives aux normes énoncées ci-dessous.

IT: Dichiarazione di conformità CE/UE

Grundfos dichiara sotto la sua esclusiva responsabilità che i prodotti CRE, CRIE, CRNE, CRTE, SPKE, MTRE, CME, BMS hp, ai quale si riferisce questa dichiarazione, sono conformi alle seguenti direttive del Consiglio riguardanti il riavvicinamento delle legislazioni degli Stati membri CE/UE.

LT: EB/ES atitikties deklaracija

Mes, Grundfos, su visa atsakomybe pareiškiame, kad produktai CRE, CRIE, CRNE, CRTE, SPKE, MTRE, CME, BMS hp, kuriems skirta ši deklaracija, atitinka žemiau nurodytas Tarybos Direktyvas dėl EB/ES šalių narių įstatymų suderinimo.

NL: EG-/EU-conformiteitsverklaring

Wij, Grundfos, verklaren geheel onder eigen verantwoordelijkheid dat de producten CRE, CRIE, CRNE, CRTE, SPKE, MTRE, CME, BMS hp, waarop de onderstaande verklaring betrekking heeft, in overeenstemming zijn met de onderstaande Richtlijnen van de Raad inzake de onderlinge aanpassing van de wetgeving van de EG-/EU-lidstaten.

PL: Deklaracja zgodności WE/EU

My, Grundfos, oświadczamy z pełną odpowiedzialnością, że nasze produkty CRE, CRIE, CRNE, CRTE, SPKE, MTRE, CME, BMS hp, których deklaracja niniejsza dotyczy, są zgodne z następującymi dyrektywami Rady w sprawie zbliżenia przepisów prawnych państw członkowskich.

RU: Декларация о соответствии ЕЭС/ЕС

Мы, компания Grundfos, со всей ответственностью заявляем, что изделия CRE, CRIE, CRNE, CRTE, SPKE, MTRE, CME, BMS hp, к которым относится нижеприведённая декларация, соответствуют нижеприведённым Директивам Совета Евросоюза о тождественности законов стран-членов ЕЭС/ЕС.

SK: EC/EU vyhlásenie o zhode

My, spoločnosť Grundfos, vyhlasujeme na svoju plnú zodpovednosť, že produkty CRE, CRIE, CRNE, CRTE, SPKE, MTRE, CME, BMS hp na ktoré sa vyhlásenie uvedené nižšie vzťahuje, sú v súlade s ustanoveniami nižšie uvedených smerníc Rady pre zblíženie právnych predpisov členských štátov EC/EÚ.

RS: Deklaracija o usklađenosti EC/EU

Mi, kompanija Grundfos, izjavljujemo pod punom vlastitom odgovornošću da je proizvod CRE, CRIE, CRNE, CRTE, SPKE, MTRE, CME, BMS hp, na koji se odnosi deklaracija ispod, u skladu sa dole prikazanim direktivama Saveta za usklađivanje zakona država članica EC/EU.

BG: Декларация за съответствие на ЕС

Ние, фирма Grundfos, заявяваме с пълна отговорност, че продуктите CRE, CRIE, CRNE, CRTE, SPKE, MTRE, CME, BMS hp, за които се отнася настоящата декларация, отговарят на следните директиви на Съвета за уеднаквяване на правните разпоредби на държавите-членки на ЕС/ЕО.

DK: EF-/EU-overensstemmelseserklæring

Vi, Grundfos, erklærer under ansvar at produkterne CRE, CRIE, CRNE, CRTE, SPKE, MTRE, CME, BMS hp som erklæringen nedenfor omhandler, er i overensstemmelse med Rådets direktiver der er nævnt nedenfor, om indbyrdes tilnærmelse til EF-/EU-medlemsstaternes lovgivning.

EE: EÜ/ELi vastavusdeklaratsioon

Meie, Grundfos, kinnitame ja kanname ainuisikulist vastutust selle eest, et toode CRE, CRIE, CRNE, CRTE, SPKE, MTRE, CME, BMS hp, mille kohta all olev deklaratsioon käib, on kooskõlas Nõukogu Direktiividega, mis on nimetatud all pool vastavalt vastuvõetud õigusaktidele ühtlustamise kohta EÜ/EL liikmesriikides.

ES: Declaración de conformidad CE/UE

Grundfos declara, bajo su exclusiva responsabilidad, que los productos CRE, CRIE, CRNE, CRTE, SPKE, MTRE, CME, BMS hp a los que hace referencia la siguiente declaración cumplen lo establecido por las siguientes Directivas del Consejo sobre la aproximación de las legislaciones de los Estados miembros de la CE/UE.

HR: EC/EU deklaracija sukladnosti

Mi, Grundfos, izjavljujemo s punom odgovornošću da su proizvodi CRE, CRIE, CRNE, CRTE, SPKE, MTRE, CME, BMS hp, na koja se izjava odnosi u nastavku, u skladu s direktivama Vijeća dolje navedene o usklađivanju zakona država članica EC/EU-a.

LV: EK/ES atbilstības deklarācija

Sabiedrība Grundfos ar pilnu atbildību paziņo, ka produkti CRE, CRIE, CRNE, CRTE, SPKE, MTRE, CME, BMS hp, uz kuru attiecas tālāk redzamā deklarācija, atbilst tālāk norādītajām Padomes direktīvām par EK/ES dalībvalstu normatīvo aktu tuvināšanu.

HU: EC/EU megfelelőségi nyilatkozat

Mi, a Grundfos vállalat, teljes felelősséggel kijelentjük, hogy a(z) CRE, CRIE, CRNE, CRTE, SPKE, MTRE, CME, BMS hp termékek, amelyre az alábbi nyilatkozat vonatkozik, megfelelnek az Európai Unió tagállamainak jogi irányelveit összehangoló tanács alábbi előírásainak.

UA: Декларація відповідності ЕС/EU

Ми, компанія Grundfos, під нашу одноосібну відповідальність заявляємо, що вироби CRE, CRIE, CRNE, CRTE, SPKE, MTRE, CME, BMS hp, до яких відноситься нижченаведена декларація, відповідають директивам ЕС/EU, переліченим нижче, щодо тотожності законів країн-членів ЄС.

PT: Declaração de conformidade CE/UE

A Grundfos declara sob sua única responsabilidade que os produtos CRE, CRIE, CRNE, CRTE, SPKE, MTRE, CME, BMS hp, aos quais diz respeito a declaração abaixo, estão em conformidade com as Directivas do Conselho sobre a aproximação das legislações dos Estados Membros da CE/UE.

RO: Declaraţie de conformitate CE/UE

Noi Grundfos declarăm pe propria răspundere că produsele CRE, CRIE, CRNE, CRTE, SPKE, MTRE, CME, BMS hp, la care se referă această declaraţie, sunt în conformitate cu Directivele de Consiliu specificate mai jos privind armonizarea legilor statelor membre CE/UE.

SI: Izjava o skladnosti ES/EU

V Grundfosu s polno odgovornostjo izjavljamo, da je izdelek CRE, CRIE, CRNE, CRTE, SPKE, MTRE, CME, BMS hp, na katerega se spodnja izjava nanaša, v skladu s spodnjimi direktivami Sveta o približevanju zakonodaje za izenačevanje pravnih predpisov držav članic ES/EU.

FI: EY-/EU-vaatimustenmukaisuusvakuutus

Grundfos vakuuttaa omalla vastuullaan, että tuotteet CRE, CRIE, CRNE, CRTE, SPKE, MTRE, CME, BMS hp, joita tämä vakuutus koskee, ovat EY-/EU:n jäsenvaltioiden lainsäädännön lähentämiseen tähtäävien Euroopan neuvoston direktiivien vaatimusten mukaisia seuraavasti.

SE: EG-/EU-försäkran om överensstämmelse

Vi, Grundfos, försäkrar under ansvar att produkterna CRE, CRIE, CRNE, CRTE, SPKE, MTRE, CME, BMS hp, som omfattas av nedanstående försäkran, är i överensstämmelse med de rådsdirektiv om inbördes närmande till EG-/EU-medlemsstaternas lagstiftning som listas nedan.

KZ: Сәйкестік жөніндегі ЕК/ЕО декларациясы

Біз, Grundfos, ЕК/ЕО мүше елдерінің заңдарына жақын төменде көрсетілген Кеңес директиваларына сәйкес төмендегі декларацияға қатысты CRE、CRIE、CRNE、CRTE、SPKE、MTRE、CME、BMS hp өнімдері біздің жеке жауапкершілігімізде екенін мәлімдейміз.

TR: EC/AB uygunluk bildirgesi

Grundfos olarak, aşağıdaki bildirim konusu olan CRE, CRIE, CRNE, CRTE, SPKE, MTRE, CME, BMS hp ürünlerinin, EC/AB Üye ülkelerinin direktiflerinin yakınlaştırılmasıyla ilgili durumun aşağıdaki Konsey Direktifleriyle uyumlu olduğunu ve bununla ilgili olarak tüm sorumluluğun bize ait olduğunu beyan ederiz.

JP: EC/EU 適合宣言

Grundfos は、その責任の下に、CRE、CRIE、CRNE、CRTE、SPKE、MTRE、CME、BMS hp、YYY 製品が EU 加盟諸国の法規に関連する、以下の評議会指令に適合していることを宣言します。

— Machinery Directive (2006/42/EC).
  Standard used: EN 809:1998 + A1:2009.

— EMC Directive (2014/30/EU).
  Standard used: EN 61800-3:2004/A1:2012.

— Ecodesign Directive (2009/125/EC).
  Water pumps:
  Commission Regulation No 547/2012.
  Applies only to water pumps marked with the minimum efficiency index MEI. See pump nameplate.

— RoHS Directives (2011/65/EU and 2015/863/EU)
  Standard used: EN IEC 63000:2018

This EC/EU declaration of conformity is only valid when published as part of the Grundfos installation and operating instructions (publication number 96780071).

Bjerringbro, 1st of March 2020

Erik Andersen
Senior Manager
Grundfos Holding A/S
Poul Due Jensens Vej 7
8850 Bjerringbro, Denmark

Person authorised to compile technical file and empowered to sign the EC/EU declaration of conformity.

UK declaration of conformity

We, Grundfos, declare under our sole responsibility that the products to which the declaration below relates, is in conformity with UK regulations, standards and specifications to which conformity is declared, as listed below:

Valid for Grundfos products:
CRE, CRIE, CRNE, CRTE, SPKE, MTRE, CME and BMS

— Supply of Machinery (Safety) Regulations 2008.
  Standard used: BS EN 809:1998 + A1:2009.
— Electromagnetic Compatibility Regulations 2016.
  Standard used: BS EN 61800-3:2004/A1:2012.
— The Ecodesign for Energy-Related Products and Energy Information Regulations 2019.
  Water pumps:
  Regulation (EU) No 547/2012.
  Applies only to water pumps marked with the minimum efficiency index MEI. See pump nameplate.
— The Restriction of the Use of Certain Hazardous Substances in Electrical and Electronic Equipment Regulations 2019.
  Standard used: BS EN IEC 63000:2018.

This UK declaration of conformity is only valid when accompanying Grundfos instructions.

UK Importer: Grundfos Pumps ltd. Grovebury Road, Leighton Buzzard, LU7 4TL.

Bjerringbro, October 5, 2020

Erik Andersen
Senior Manager
Grundfos Holding A/S
Poul Due Jensens Vej 7
8850 Bjerringbro, Denmark

Manufacturer and person empowered to sign the UK declaration of conformity.

10000324408

GB: Moroccan declaration of conformity

We, Grundfos, declare under our sole responsibility that the products to which the declaration below relates, are in conformity with Moroccan laws, orders, standards and specifications to which conformity is declared, as listed below:

Valid for Grundfos products:
CRE, CRIE, CRNE, CRTE (MGE 15-22 kW)

Law No 24-09, 2011 Safety of products and services and the following orders:
Order No 2573-14, 2015 Safety Requirements for Low Voltage Electrical Equipment
Standards used: NM EN 809+A1:2015
Order No 2574-14, 2015 Electromagnetic Compatibility
Standards used: NM EN 61800-3:2018

This Moroccan declaration of conformity is only valid when accompanying Grundfos instructions.

Bjerringbro, 13/12/2019

Erik Andersen
Senior Manager
Grundfos Holding A/S
Poul Due Jensens Vej 7
8850 Bjerringbro, Denmark

Manufacturer and person empowered to sign the Moroccan declaration of conformity.

10000268977

FR: Déclaration de conformité marocaine

Nous, Grundfos, déclarons sous notre seule responsabilité que les produits auxquels se réfère cette déclaration, sont conformes aux lois, ordonnances, normes et spécifications marocaines pour lesquelles la conformité est déclarée, comme indiqué ci-dessous :

Valable pour les produits Grundfos :
CRE, CRIE, CRNE, CRTE (MGE 15-22 kW)

Sécurité des produits et services, loi n° 24-09, 2011 et décrets suivants :
Exigences de sécurité pour les équipements électriques basse tension, ordonnance n° 2573-14, 2015
Normes utilisées : NM EN 809+A1:2015
Compatibilité électromagnétique, ordonnance n° 2574-14, 2015
Normes utilisées : NM EN 61800-3:2018

Cette déclaration de conformité marocaine est uniquement valide lorsqu'elle accompagne la notice d'installation et de fonctionnement Grundfos.

Bjerringbro, 13/12/2019

Erik Andersen
Senior Manager
Grundfos Holding A/S
Poul Due Jensens Vej 7
8850 Bjerringbro, Denmark

Fabricant et personne habilitée à signer la Déclaration de conformité marocaine.

10000268977

AR: إقـــرار المطابقـــة المغـــربي

نحـــن، جرونـــدفوس، نقـــر تحـــت مســـؤوليتنا وحـــدنا بـــأن المنتجـــات الـــتي يتعلـــق بهـــا الإقـــرار أدنـــاه، تتوافـــق مـــع القـــوانين والقـــرارات والمعـــايير والمواصـــفات المغربيـــة :الـــتي تـــم إقـــرار المطابقـــة بشـــأنها، كمـــا هـــو موضـــح أدنـــاه

ســـارٍ علـــى منتجـــات جرونـــدفوس:
CRE, CRIE, CRNE, CRTE (15-22 كيلـــو واط MGE)

قـــانون رقـــم 24-09، 2011 بشـــأن ســـلامة المنتجـــات والخـــدمات :والقـــرارات التاليـــة
القـــرار رقـــم 2573-14، 2015 متطلبـــات الســـلامة للمعـــدات الكهربائيـــة ذات الجهـــد المنخفـــض
المعـــايير المســـتخدمة:
NM EN 809+A1:2015
القـــرار رقـــم 2574-14، 2015 التوافـــق الكهرومغناطيســـي

Erik Andersen
Senior Manager
Grundfos Holding A/S
Poul Due Jensens Vej 7
8850 Bjerringbro, Denmark

الجهـــة المصـــنعة والشـــخص المفـــوض بتوقيـــع إقـــرار .المطابقـــة المغـــربي

RUS

CR, CRI, CRN, CRE, CRIE, CRNE

Руководство по эксплуатации

Руководство по эксплуатации на данное изделие является составным и включает в себя несколько частей:

Часть 1: настоящее «Руководство по эксплуатации».

Часть 2: электронная часть «Паспорт. Руководство по монтажу и эксплуатации» размещенная на сайте компании Грундфос. Перейдите по ссылке, указанной в конце документа.

Часть 3: информация о сроке изготовления, размещенная на фирменной табличке изделия.

Сведения о сертификации:

Насосы типа CR, CRI, CRN, CRE, CRIE, CRNE сертифицированы на соответствие требованиям Технических регламентов Таможенного союза: ТР ТС 004/2011 «О безопасности низковольтного оборудования»; ТР ТС 010/2011 «О безопасности машин и оборудования»; ТР ТС 020/2011 «Электромагнитная совместимость технических средств».

KAZ

CR, CRI, CRN, CRE, CRIE, CRNE

Пайдалану бойынша нұсқаулық

Атаулы өнімге арналған пайдалану бойынша нұсқаулық құрамалы болып келеді және келесі бөлімдерден тұрады:

1 бөлім: атаулы «Пайдалану бойынша нұсқаулық»

2 бөлім: Грундфос компаниясының сайтында орналасқан электронды бөлім «Төлқұжат, Құрастыру және пайдалану бойынша нұсқаулық». Құжат соңында көрсетілген сілтеме арқылы өтіңіз.

3 бөлім: өнімнің фирмалық тақташасында орналасқан шығарылған уақыты жөніндегі мәлімет

Сертификаттау туралы ақпарат:

CR, CRI, CRN, CRE, CRIE, CRNE типті сорғылары «Төмен вольтты жабдықтардың қауіпсіздігі туралы» (ТР ТС 004/2011), «Машиналар және жабдықтар қауіпсіздігі туралы» (ТР ТС 010/2011) «Техникалық заттардың электрлі магниттік сәйкестілігі» (ТР ТС 020/2011) Кеден Одағының техникалық регламенттерінің талаптарына сәйкес сертификатталды.

KG

CR, CRI, CRN, CRE, CRIE, CRNE

Пайдалануу боюнча колдонмо

Аталган жабдууну пайдалануу боюнча колдонмо курамдык жана өзүнө бир нече бөлүкчөнү камтыйт:

1-Бөлүк: «Пайдалануу боюнча колдонмо»

2-Бөлүк: «Паспорт. Пайдалануу жана монтаж боюнча колдонмо» электрондук бөлүгү Грундфос компаниянын сайтында жайгашкан. Документтин аягында көрсөтүлгөн шилтемеге кайрылыңыз.

3-Бөлүк: жабдуунун фирмалык тактасында жайгашкан даярдоо мөөнөтү тууралуу маалымат.

Шайкештик жөнүндө декларация

CR, CRI, CRN, CRE, CRIE, CRNE түрүндөгү соргучтар Бажы Биримдиктин Техникалык регламенттин талаптарына ылайыктуу тастыкталган: ТР ТБ 004/2011 «Төмөн вольттук жабдуунун коопсуздугу жөнүндө»; ТР ТБ 010/2011 «Жабдуу жана машиналардын коопсуздугу жөнүндө»; ТР ТБ 020/2011 «Техникалык каражаттардын электрмагниттик шайкештиги».

ARM

CR, CRI, CRN, CRE, CRIE, CRNE

Շահագործման ձեռնարկ

Տվյալ սարքավորման շահագործման ձեռնարկը բաղկացած է մի քանի մասերից.

Մաս 1. սույն «Շահագործման ձեռնարկ»:

Մաս 2. էլեկտրոնային մաս. այն է՝ «Անձնագիր: Մոնտաժման և շահագործման ձեռնարկ» տեղադրված «Գրունդֆոս». Անցեք փաստաթղթի վերջում նշված հղումով.

Մաս 3. տեղեկություն արտադրման ամսաթվի վերաբերյալ՝ նշված սարքավորման պիտակի վրա:

Տեղեկություններ հավաստագրման մասին՝

CR, CRI, CRN, CRE, CRIE, CRNE տիպի պոմպերը սերտիֆիկացված են համաձայն Մաքսային Միության տեխնիկական կանոնակարգի պահանջների՝ TP TC 004/2011 «Ցածրավոլտ սարքավորումների վերաբերյալ», TP TC 010/2011«Մեքենաների և սարքավորումների անվտանգության վերաբերյալ» ; TP TC 020/2011 «Տեխնիկական միջոցների էլեկտրամագնիսական համատեղելիության վերաբերյալ»:

CR, CRI, CRN, CRE, CRIE, CRNE

http://net.grundfos.com/qr/i/98763042

CR, CRN 95-255

http://net.grundfos.com/qr/i/99468892

CRE, CRIE, CRNE, CRTE, MTRE, CME до 11 кВт

http://net.grundfos.com/qr/i/98772792

CRE, CRIE, CRNE, CRTE, MTRE, CME свыше 11 кВт

http://net.grundfos.com/qr/i/98772795

99688383	0719
ECM: 1266128	

YETKİLİ GRUNDFOS SERVİSLERİ

Firma	Adres	Telefon Cep telefonu Faks	İlgili Kişi Eposta
GRUNDFOS POMPA KOCAELİ	GEBZE ORGANİZE SANAYİ BÖLGESİ. İHSAN DEDE CADDESİ.2.YOL 200.SOKAK.NO:204 GEBZE KOCAELİ	0262 679 79 79 0553 259 51 63 0262 679 79 05	EMRAH ŞİMŞEK esimsek@grundfos.com
SUNPO ELEKTRİK ADANA	YEŞİLOBA MAH. 46003 SOK. ARSLANDAMI İŞ MERK. C BLOK NO:6/2-I SEYHAN ADANA	0322 428 50 14 0533 461 71 14 0322 428 48 49	LEVENT BAKIRKOL sunpo-elektrik@hotmail.com
ARDA POMPA ANKARA	26 NOLU İŞ MERKEZİ 1120.SOKAK NO:5/1,5/5 OSTİM/ANKARA	0312 385 98 93 0541 805 89 44 0312 385 8904	METİN ENGİN CANBAZ metincanbaz@ardapompa.com.tr
UĞUR SU POMPALARI ANKARA	AHİ EVRAN MAHALLESİ ÇAĞRIŞIM CADDESİ NO:2/15 SİNCAN /ANKARA	0312 394 37 52 0532 505 12 62 0312 394 37 19	UĞUR YETİŞ ÖCAL uguryetisocal@gmail.com
GROSER A.Ş. ANTALYA	ŞAFAK MAHALLESİ.5041.SOKAK.SANAYİ 28 C BLOK NO:29 KEPEZ ANTALYA	0242 221 43 43 0532 793 89 74 0242 221 43 42	DOĞAN YÜCEL servis@groseras.com
KOÇYİĞİTLER ELEKTRİK BOBİNAJ ANTALYA	ORTA MAH. SERİK CAD. NO.116 SERİK ANTALYA	0242 722 48 46 0532 523 29 34 0242 722 48 46	BİLAL KOÇYİĞİT kocyigitler@kocyigitlerbobinaj.com
TEKNİK BOBİNAJ BURSA	ALAADDİN BEY MH.624.SK MESE 5 İŞ MERKEZİ NO:26 D:10 NİLÜFER/BURSA	0224 443 78 83 0507 311 19 08 0224 443 78 95	GÜLDEN MÜÇEOĞLU gulden@tbobinaj.com.tr
ASİN TEKNOLOJİ GAZİANTEP	MÜCAHİTLER MAHALLESİ 54 NOLU SOKAK.GÜNEYDOĞU İŞ MERKEZİ NO:10/A ŞEHİTKAMİL	0342 321 69 66 0532 698 69 66 0342 321 69 61	MEHMET DUMAN mduman@asinteknoloji.com.tr
ARI MOTOR İSTANBUL	ORHANLI MESCİT MH.DEMOKRASİ CD.BİRMES SAN.SİT.A-3 BLOK NO:9 TUZLA İSTANBUL	0216 394 21 67 0532 501 47 69 0216 394 23 39	EMİN ARI aycan@arimotor.com.tr
SERİ MEKANİK İSTANBUL	SEYİTNİZAM MAH. DEMİRCİLER SİT. 7.YOL . NO:6 ZEYTİNBURNU İSTANBUL	0212 679 57 23 0532 740 18 02 0212 415 61 98	TAMER ERÜNSAL servis@serimekanik.com
DAMLA POMPA İZMİR	1203/4 SOKAK NO:2/E YENİŞEHİR İZMİR	0232 449 02 48 0532 277 96 44 0232 459 43 05	NEVZAT KIYAK nkiyak@damlapompa.com
ÇAĞRI ELEKTRİK KAYSERİ	ESKİ SANAYİ BÖLGESİ 3.CADDE NO;3-B KOCASİNAN-KAYSERİ	0352 320 19 64 0532 326 23 25 0352 330 37 36	ADEM ÇAKICI kayseri.cagrielektrik@gmail.com
MAKSOM OTOMASYON SAMSUN	19 MAYIS MAHALLESİ.642.SOKAK.NO:23 TEKKEKÖY SAMSUN	0362 256 23 56 0532 646 61 42 -	MUSTAFA SARI info@maksom.com
DETAY MÜHENDİSLİK TEKİRDAĞ	ZAFER MAHALLESİ ŞEHİT YÜZBAŞI YÜCEL KENTER CADDESİ 06/A BLOK NO:5-6 ÇORLU TEKİRDAĞ	0282 673 51 33 0549 668 68 68 0282 673 51 35	EROL KARTOĞLU erol@detay-muhendislik.com
ROTATEK ENDÜSTRİYEL TEKİRDAĞ	ZAFER MH. ŞEHİT YÜZBAŞI YÜCEL KENTER CD. YENİ SANAYİ SİTESİ 08-A BLOK NO:14 ÇORLU / TEKİRDAĞ	0282 654 51 99 0532 788 11 39 0282 654 51 81	ÖZCAN AKBAŞ ozcan@rotaendustriyel.com
İLDEM TEKNİK ISITMA VAN	ŞEREFİYE MAH ORDU CAD ARAS AP NO 75 İPEKYOLU VAN	0432 216 20 83 0532 237 54 59 0432 216 20 83	BURHAN DEMİREKİ il-dem-teknik@hotmail.com
BARIŞ BOBİNAJ K.K.T.C.	LARNAKA YOLU ÜZERİ.PAPATYA APT.NO:3-4 GAZİMAĞUSA	0542 884 06 62 0542 854 11 35 0533 884 06 62	BARIŞ KIZILKILINÇ barisbobinaj@hotmail.com

Argentina
Bombas GRUNDFOS de Argentina S.A.
Ruta Panamericana km. 37.500 Centro Industrial Garin
1619 Garín Pcia. de B.A.
Phone: +54-3327 414 444
Telefax: +54-3327 45 3190

Australia
GRUNDFOS Pumps Pty. Ltd.
P.O. Box 2040
Regency Park
South Australia 5942
Phone: +61-8-8461-4611
Telefax: +61-8-8340 0155

Austria
GRUNDFOS Pumpen Vertrieb Ges.m.b.H.
Grundfosstraße 2
A-5082 Grödig/Salzburg
Tel.: +43-6246-883-0
Telefax: +43-6246-883-30

Belgium
N.V. GRUNDFOS Bellux S.A.
Boomsesteenweg 81-83
B-2630 Aartselaar
Tél.: +32-3-870 7300
Télécopie: +32-3-870 7301

Belarus
Представительство ГРУНДФОС в Минске
220125, Минск
ул. Шафарнянская, 11, оф. 56, БЦ «Порт»
Тел.: +375 17 397 397 3
+375 17 397 397 4
Факс: +375 17 397 397 1
E-mail: minsk@grundfos.com

Bosnia and Herzegovina
GRUNDFOS Sarajevo
Zmaja od Bosne 7-7A,
BH-71000 Sarajevo
Phone: +387 33 592 480
Telefax: +387 33 590 465
www.ba.grundfos.com
e-mail: grundfos@bih.net.ba

Brazil
BOMBAS GRUNDFOS DO BRASIL
Av. Humberto de Alencar Castelo Branco, 630
CEP 09850 - 300
São Bernardo do Campo - SP
Phone: +55-11 4393 5533
Telefax: +55-11 4343 5015

Bulgaria
Grundfos Bulgaria EOOD
Slatina District
Iztochna Tangenta street no. 100
BG - 1592 Sofia
Tel. +359 2 49 22 200
Fax. +359 2 49 22 201
email: bulgaria@grundfos.bg

Canada
GRUNDFOS Canada Inc.
2941 Brighton Road
Oakville, Ontario
L6H 6C9
Phone: +1-905 829 9533
Telefax: +1-905 829 9512

China
GRUNDFOS Pumps (Shanghai) Co. Ltd.
10F The Hub, No. 33 Suhong Road
Minhang District
Shanghai 201106
PRC
Phone: +86 21 612 252 22
Telefax: +86 21 612 253 33

COLOMBIA
GRUNDFOS Colombia S.A.S.
Km 1.5 vía Siberia-Cota Conj. Potrero Chico,
Parque Empresarial Arcos de Cota Bod. 1A.
Cota, Cundinamarca
Phone: +57(1)-2913444
Telefax: +57(1)-8764586

Croatia
GRUNDFOS CROATIA d.o.o.
Buzinski prilaz 38, Buzin
HR-10010 Zagreb
Phone: +385 1 6595 400
Telefax: +385 1 6595 499
www.hr.grundfos.com

GRUNDFOS Sales Czechia and Slovakia s.r.o.
Čajkovského 21
779 00 Olomouc
Phone: +420-585-716 111

Denmark
GRUNDFOS DK A/S
Martin Bachs Vej 3
DK-8850 Bjerringbro
Tlf.: +45-87 50 50 50
Telefax: +45-87 50 51 51
E-mail: info_GDK@grundfos.com
www.grundfos.com/DK

Estonia
GRUNDFOS Pumps Eesti OÜ
Peterburi tee 92G
11415 Tallinn
Tel: + 372 606 1690
Fax: + 372 606 1691

Finland
OY GRUNDFOS Pumput AB
Trukkikuja 1
FI-01360 Vantaa
Phone: +358-(0) 207 889 500

France
Pompes GRUNDFOS Distribution S.A.
Parc d'Activités de Chesnes
57, rue de Malacombe
F-38290 St. Quentin Fallavier (Lyon)
Tél.: +33-4 74 82 15 15
Télécopie: +33-4 74 94 10 51

Germany
GRUNDFOS GMBH
Schlüterstr. 33
40699 Erkrath
Tel.: +49-(0) 211 929 69-0
Telefax: +49-(0) 211 929 69-3799
e-mail: infoservice@grundfos.de
Service in Deutschland:
e-mail: kundendienst@grundfos.de

Greece
GRUNDFOS Hellas A.E.B.E.
20th km. Athinon-Markopoulou Av.
P.O. Box 71
GR-19002 Peania
Phone: +0030-210-66 83 400
Telefax: +0030-210-66 46 273

Hong Kong
GRUNDFOS Pumps (Hong Kong) Ltd.
Unit 1, Ground floor
Siu Wai Industrial Centre
29-33 Wing Hong Street &
68 King Lam Street, Cheung Sha Wan
Kowloon
Phone: +852-27861706 / 27861741
Telefax: +852-27858664

Hungary
GRUNDFOS Hungária Kft.
Tópark u. 8
H-2045 Törökbálint,
Phone: +36-23 511 110
Telefax: +36-23 511 111

India
GRUNDFOS Pumps India Private Limited
118 Old Mahabalipuram Road
Thoraipakkam
Chennai 600 096
Phone: +91-44 2496 6800

Indonesia
PT. GRUNDFOS POMPA
Graha Intirub Lt. 2 & 3
Jln. Cililitan Besar No.454. Makasar, Jakarta Timur
ID-Jakarta 13650
Phone: +62 21-469-51900
Telefax: +62 21-460 6910 / 460 6901

Ireland
GRUNDFOS (Ireland) Ltd.
Unit A, Merrywell Business Park
Ballymount Road Lower
Dublin 12
Phone: +353-1-4089 800
Telefax: +353-1-4089 830

Italy
GRUNDFOS Pompe Italia S.r.l.
Via Gran Sasso 4
I-20060 Truccazzano (Milano)
Tel.: +39-02-95838112
Telefax: +39-02-95309290 / 95838461

Japan
GRUNDFOS Pumps K.K.
1-2-3, Shin-Miyakoda, Kita-ku, Hamamatsu
431-2103 Japan
Phone: +81 53 428 4760
Telefax: +81 53 428 5005

Korea
GRUNDFOS Pumps Korea Ltd.
6th Floor, Aju Building 679-5
Yeoksam-dong, Kangnam-ku, 135-916
Seoul, Korea
Phone: +82-2-5317 600
Telefax: +82-2-5633 725

Latvia
SIA GRUNDFOS Pumps Latvia
Deglava biznesa centrs
Augusta Deglava ielā 60, LV-1035, Rīga,
Tālr.: + 371 714 9640, 7 149 641
Fakss: + 371 914 9646

Lithuania
GRUNDFOS Pumps UAB
Smolensko g. 6
LT-03201 Vilnius
Tel: + 370 52 395 430
Fax: + 370 52 395 431

Malaysia
GRUNDFOS Pumps Sdn. Bhd.
7 Jalan Peguam U1/25
Glenmarie Industrial Park
40150 Shah Alam
Selangor
Phone: +60-3-5569 2922
Telefax: +60-3-5569 2866

Mexico
Bombas GRUNDFOS de México S.A. de C.V.
Boulevard TLC No. 15
Parque Industrial Stiva Aeropuerto
Apodaca, N.L. 66600
Phone: +52-81-8144 4000
Telefax: +52-81-8144 4010

Netherlands
GRUNDFOS Netherlands
Veluwezoom 35
1326 AE Almere
Postbus 22015
1302 CA ALMERE
Tel.: +31-88-478 6336
Telefax: +31-88-478 6332
E-mail: info_gnl@grundfos.com

New Zealand
GRUNDFOS Pumps NZ Ltd.
17 Beatrice Tinsley Crescent
North Harbour Industrial Estate
Albany, Auckland
Phone: +64-9-415 3240
Telefax: +64-9-415 3250

Norway
GRUNDFOS Pumper A/S
Strømsveien 344
Postboks 235, Leirdal
N-1011 Oslo
Tlf.: +47-22 90 47 00
Telefax: +47-22 32 21 50

Poland
GRUNDFOS Pompy Sp. z o.o.
ul. Klonowa 23
Baranowo k. Poznania
PL-62-081 Przeźmierowo
Tel: (+48-61) 650 13 00
Fax: (+48-61) 650 13 50

Portugal
Bombas GRUNDFOS Portugal, S.A.
Rua Calvet de Magalhães, 241
Apartado 1079
P-2770-153 Paço de Arcos
Tel.: +351-21-440 76 00
Telefax: +351-21-440 76 90

Romania
Grundfos Pompe România SRL
S-PARK BUSINESS CENTER, Clădirea A2,
etaj 2, Str. Tipografilor, Nr. 11-15, Sector 1,
Cod 013714, Bucuresti, Romania,
Tel: 004 021 2004 100
E-mail: romania@grundfos.ro
www.grundfos.ro

Russia
ООО Грундфос Россия
ул. Школьная, 39-41
Москва, RU-109544, Russia
Тел. (+7) 495 564-88-00 (495) 737-30-00
Факс (+7) 495 564 8811
E-mail grundfos.moscow@grundfos.com

Serbia
Grundfos Srbija d.o.o.
Omladinskih brigada 90b
11070 Novi Beograd
Phone: +381 11 2258 740
Telefax: +381 11 2281 769
www.rs.grundfos.com

Singapore
GRUNDFOS (Singapore) Pte. Ltd.
25 Jalan Tukang
Singapore 619264
Phone: +65-6681 9688
Telefax: +65-6681 9689

Slovakia
GRUNDFOS s.r.o.
Prievozská 4D
821 09 BRATISLAVA
Phona: +421 2 5020 1426
sk.grundfos.com

Slovenia
GRUNDFOS LJUBLJANA, d.o.o.
Leskoškova 9e, 1122 Ljubljana
Phone: +386 (0) 1 568 06 10
Telefax: +386 (0)1 568 06 19
E-mail: tehnika-si@grundfos.com

South Africa
Grundfos (PTY) Ltd.
16 Lascelles Drive, Meadowbrook Estate
1609 Germiston, Johannesburg
Tel.: (+27) 10 248 6000
Fax: (+27) 10 248 6002
E-mail: lgradidge@grundfos.com

Spain
Bombas GRUNDFOS España S.A.
Camino de la Fuentecilla, s/n
E-28110 Algete (Madrid)
Tel.: +34-91-848 8800
Telefax: +34-91-628 0465

Sweden
GRUNDFOS AB
Box 333 (Lunnagårdsgatan 6)
431 24 Mölndal
Tel.: +46 31 332 23 000
Telefax: +46 31 331 94 60

Switzerland
GRUNDFOS Pumpen AG
Bruggacherstrasse 10
CH-8117 Fällanden/ZH
Tel.: +41-44-806 8111
Telefax: +41-44-806 8115

Taiwan
GRUNDFOS Pumps (Taiwan) Ltd.
7 Floor, 219 Min-Chuan Road
Taichung, Taiwan, R.O.C.
Phone: +886-4-2305 0868
Telefax: +886-4-2305 0878

Thailand
GRUNDFOS (Thailand) Ltd.
92 Chaloem Phrakiat Rama 9 Road,
Dokmai, Pravej, Bangkok 10250
Phone: +66-2-725 8999
Telefax: +66-2-725 8998

Turkey
GRUNDFOS POMPA San. ve Tic. Ltd. Sti.
Gebze Organize Sanayi Bölgesi
Ihsan dede Caddesi,
2. yol 200. Sokak No. 204
41490 Gebze/ Kocaeli
Phone: +90 - 262-679 7979
Telefax: +90 - 262-679 7905
E-mail: satis@grundfos.com

Ukraine
Бізнес Центр Європа
Столичне шосе, 103
м. Київ, 03131, Україна
Телефон: (+38 044) 237 04 00
Факс.: (+38 044) 237 04 01
E-mail: ukraine@grundfos.com

United Arab Emirates
GRUNDFOS Gulf Distribution
P.O. Box 16768
Jebel Ali Free Zone
Dubai
Phone: +971 4 8815 166
Telefax: +971 4 8815 136

United Kingdom
GRUNDFOS Pumps Ltd.
Grovebury Road
Leighton Buzzard/Beds. LU7 4TL
Phone: +44-1525-850000
Telefax: +44-1525-850011

U.S.A.
GRUNDFOS Pumps Corporation
9300 Loiret Blvd.
Lenexa, Kansas 66219
Phone: +1-913-227-3400
Telefax: +1-913-227-3500

Uzbekistan
Grundfos Tashkent, Uzbekistan The Representative Office of Grundfos Kazakhstan in Uzbekistan
38a, Oybek street, Tashkent
Телефон: (+998) 71 150 3290 / 71 150 3291
Факс: (+998) 71 150 3292

Addresses Revised 09.09.2020

96780071 01.2021
ECM: 1308241

FIL-TREK CORPORATION
55 Stafford Court
Cambridge, ON N1T 1B3
P (519) 623-7448
F (519) 623-8807

LP SERIES

Multi-Bag Filter Housings

- Multi-Bag Filter Housing
- ASME Design/Non-Code
- SS304 and SS316 are NSF/ANSI 61 certified

Economic multi-purpose ASME code ("U" & "UM") and non-code design bag filter housings.

SUITABLE USES

Air & Gas · Desalination · Coolant · Water · Electronics · Coatings
Oil & Gas · Chemical · Pulp & Paper · Power · Marine · Equipment

MEDIA	Accepts multiple double length (P2) bags.
DESIGN PRESSURE	150 psig (10.3bar) @ 400°F (204.4°C).
AVAILABLE MATERIALS	Carbon or Stainless Steel 304 or 316*. Also available in LDX2101, C276, AL6XN, 2205, 2507 & Monel 400. **NSF/ANSI 61 certification available for SS304 and SS316 (S4LP/S6LP).*
ADDITIONAL FEATURES	Allows for easy filter bag removal without ladders or platforms to change filter bags. Swing bolt closure allows for quick bag change out.

NSF
Certified to NSF/ANSI 61

Custom sizes, configurations, materials of construction and other options may be available. Please contact Fil-Trek

For drawings, flow charts, custom applications and filter cartridge information please visit www.fil-trek.com.

LP SERIES

Multi-Bag Filter Housings

- Multi-Bag Filter Housing
- ASME Design/Non-Code

HOUSING SPECIFICATIONS

*Indicates standard configuration

Inlet/Outlet	2" Flange -18" Flange
Dirty Drain	½" NPT on all sizes*
Clean Drain	2" NPT on all sizes*
Vent	½" NPT on all sizes*
Gauges	½" NPT on all sizes*
Basket	⅛" on 3⁄16" perforated plate* **Other basket options available*
Headlift	Mechanical Davit (std) for up to LP38* Hydraulic Davit on LP40 and larger*
Legs	Angle Iron Legs with footpads*
Closure	Swing bolt closure*
Standard Pressure	150 PSI
Standard Temperature	400°F (204°C)
Certifications	U, UM, CE, NB, CRN

MATERIAL OF CONSTRUCTION

MATERIAL OF CONSTRUCTION	MAX. OPERATING PRESSURE	MAX. DESIGN TEMP
Carbon Steel	150 psi (10.3bar)	400°F (204°C)
304 Stainless Steel*	150 psi (10.3bar)	400°F (204°C)
316 Stainless Steel*	150 psi (10.3bar)	400°F (204°C)

**NSF/ANSI 61 certification available for SS304 and SS316 (S4LP/S6LP).*

MODEL FLOW RATES

MODEL	# OF BAGS	FLOW RATE (GPM)	MAX FLANGE
LP16	2	250	4"
LP18	3	375	6"
LP20	4	500	6"
LP22	5	625	6"
LP24	6/7	750/875	6"
LP26	7	875	8"
LP28	8	1000	8"
LP30	10	1250	8"
LP32	12	1500	8"
LP34	12	1500	10"
LP36	14	1750	10"
LP38	17	2125	10"
LP40	18	2250	10"
LP42	19	2375	10"
LP44	22	2750	12"
LP46	25	3125	12"
LP48	26	3250	14"
LP50	30	3750	14"
LP52	32	4000	14"
LP54	35	4375	14"
LP56	38	4750	14"
LP58	38	4750	14"
LP60	41	5125	14"

**Flow rates above are based on water at 125gpm per filter bag, using 10 micron single layer filter bags with a clean pressure drop of 2psi. When operating using baskets only, each basket can flow up to 200gpm. Actual flow rates are dependent on fluid viscosity, bag micron rating, type of filter bag, and contaminant. Please contact Fil-Trek for assistance with sizing.*

FIL-TREK

55 Stafford Court, Cambridge, ON N1T 1B3 **P** (519) 623-7448 **F** (519) 623-8807

For more information, e-mail: info@fil-trek.com or visit Fil-Trek.com

LP SERIES

Multi-Bag Filter Housings

- Multi-Bag Filter Housing
- ASME Design/Non-Code

HOUSING OPTIONS

*Indicates standard configuration

Configuration Options

(-) A – Side in/side out*
B – In-Line side in/side out
C – Side in/Bottom out
D – Side in/Side out, Same Side

Basket Options

⅛" on 3/16" perforated basket*
MB___- Mesh lined basket
(insert mesh size in open space)

Finish Options

(-) Paint "National Blue" *(std for CS)**
(-) Bead Blast *(std for SS304 or SS316)**
EP1 – Electro polish Inside/Outside
EP2 – Inside only
EP3 – Outside only
PP – Passivation

O-Ring Options

(-) Buna-N*
ED – EPDM
VI – Viton
SI – Silicone
TEV – Teflon encapsulated Viton

Accessories

Direct Reading Gauge
DP Gauge
Safety Relief Valves
Vent Valves
Drain Valves
Air Eliminator
Omega Springs
Balloon/Liquid Displacer
Bag Magnets

MODEL DIMENSIONAL DETAILS

MODEL	# OF BAGS	SHIPPING WGT (LBS)	A	B	C	D	E
LP16	2	300	16.50"	30"	18"	28"	55"
LP18	3	400	18.50"	34"	20"	30"	61"
LP20	4	450	20.50"	34"	20"	34"	62"
LP22	5	550	22.50"	36"	22"	36"	66"
LP24	6/7	600	24.50"	36"	22"	38"	67"
LP26	7	750	26.50"	40.5"	24"	40"	74"
LP28	8	850	28.50"	40.5"	24"	44"	74"
LP30	10	950	30.50"	40.5"	24"	46"	76"
LP32	12	1150	32.63"	42.5"	26"	48"	80"
LP34	12	1,400	34.63"	47"	28"	52"	84"
LP36	14	1,500	36.63"	47"	28"	54"	84"
LP38	17	1,750	38.63"	47"	28"	56"	86"
LP40	18	1,825	40.63"	50"	30"	58"	82"
LP42	19	2125	42.75"	50"	30"	60"	82"
LP44	22	2375	44.75"	55"	32"	64"	88"
LP46	25	2625	46.75"	57"	34"	66"	92"
LP48	26	3000	48.88"	61"	36"	66"	98"
LP50	30	3250	50.88"	61"	36"	70"	98"
LP52	32	3500	52.88"	61"	36"	72"	98"
LP54	35	4000	54.88"	61"	36"	74"	98"
LP56	38	4250	56.88"	63"	38"	76"	102"
LP58	38	4625	58.88"	63"	38"	80"	102"
LP60	41	5000	60.88"	63"	38"	82"	102"

Dimensions above are based on standard configuration 'A', side in/side out. Contact factory for weights and dimensions for all other model configurations.

CHART LEGEND

A OUTSIDE DIAMETER
B FLOOR TO INLET
C FLOOR TO OUTLET
D FACE TO FACE
E OVERALL HEIGHT

Style A

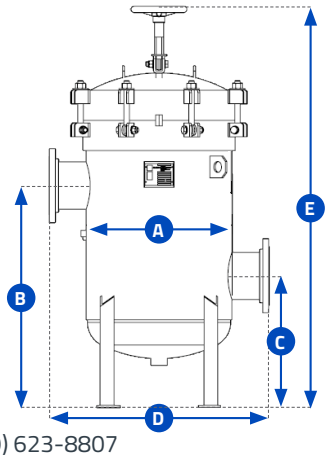

FIL-TREK
55 Stafford Court, Cambridge, ON N1T 1B3 **P** (519) 623-7448 **F** (519) 623-8807
For more information, e-mail: info@fil-trek.com or visit Fil-Trek.com

LP SERIES

Multi-Bag Filter Housings

- Multi-Bag Filter Housing
- ASME Design/Non-Code

FLOW CHARTS

HOUSING PRESSURE DROP vs LIQUID FLOW RATE

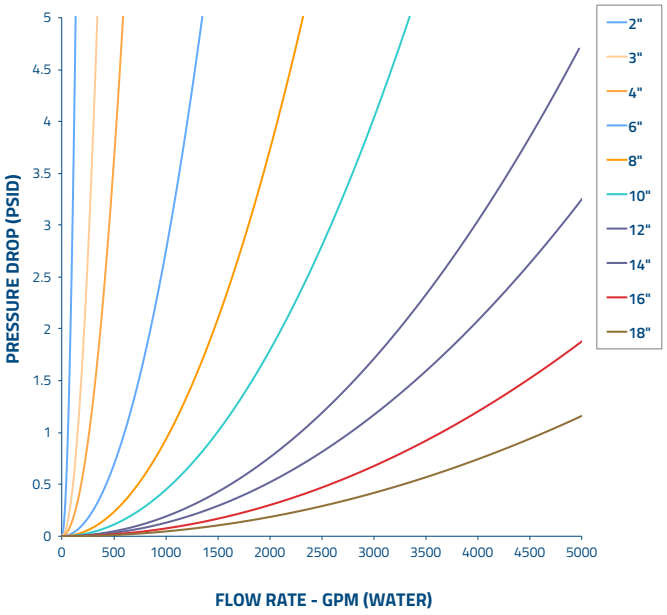

MODEL CONFIGURATIONS

Style A: Side in/side out
LP Standard Design

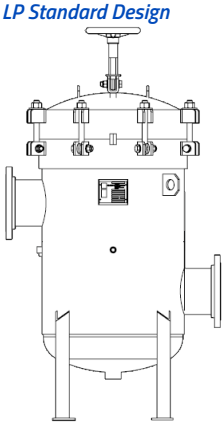

Style B: In-Line side in/out

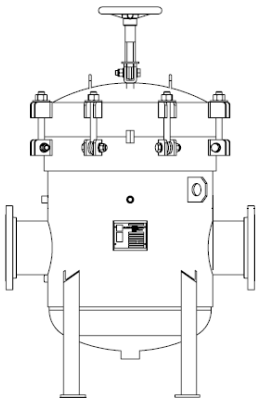

Style C: Side in/bottom out

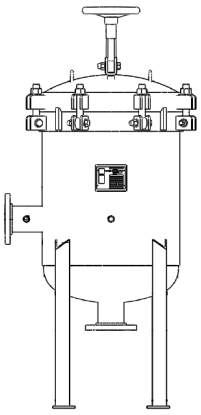

Style D: Same side in/out

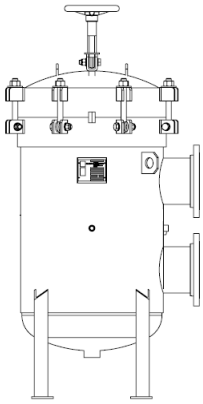

PRODUCT NOMENCLATURE

S6LP24-712-6F-DA-150

S6	LP	18	3	12	6F	A	150	-
MATERIAL	**MODEL**	**HOUSING DIAMETER**	**# OF BASKETS**	**BASKET LENGTH**	**CONNECTION TYPE**	**MODEL CONFIGURATION**	**DESIGN PRESSURE**	**OPTIONS**
(-) – CS **S4** – SS304** **S6** – SS316**	**LP** - ASME Code* **ELP** - Non-Code	See Table	See Table	**12** – Size 2	See Table	**A** – Side in/out* **B** – In-line **C** – Side in/bottom out **D** – Same side in/out	**150**	See "Housing Options"

**LP series is an ASME code stamped housing. This vessel is also available in an industrial non-code design. For non-code, add the prefix "E" to the LP in the part number.*
***NSF/ANSI 61 certification available for SS304 and SS316 (S4LP/S6LP).*

FIL-TREK
55 Stafford Court, Cambridge, ON N1T 1B3 **P** (519) 623-7448 **F** (519) 623-8807
For more information, e-mail: info@fil-trek.com or visit Fil-Trek.com

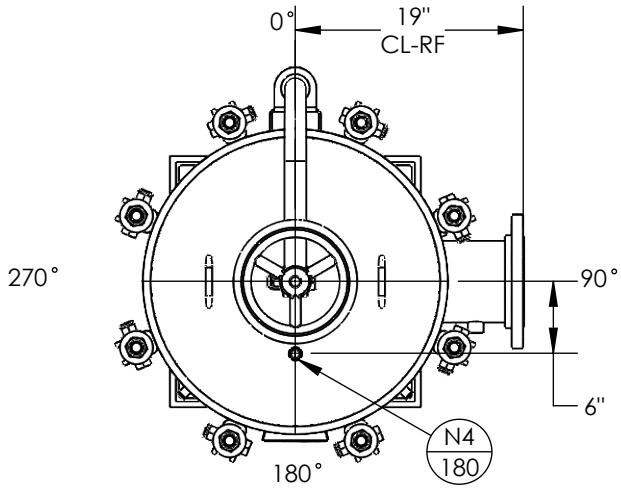

NOZZLE SCHEDULE			
MARK	QTY	SIZE / RATING	DESCRIPTION
N1	1	6" 150# RFSO	INLET
N2	1	6" 150# RFSO	OUTLET
N3	2	1/2" 3000# NPT	PRESSURE GAUGE
N4	1	1/2" 3000# NPT	VENT
N5	1	2" 3000# NPT	CLEAN DRAIN
N6	1	1/2" 3000# NPT	DIRTY DRAIN

VESSEL DESIGN CONDITIONS			
CODE:	ASME SECTION VIII DIV. 1, 2019 EDITION		
M.A.W.P.:	150 PSI @ 400°F	M.D.M.T.:	-50° F @ 150 PSI
M.A.W.P.:	FV PSI @ 400°F		
CORROSION ALLOWANCE:	NONE	HYDROTEST PRESS:	210 PSI
STAMP:	U	SERVICE:	UNK. LIQUID NON LETHAL
PWHT:	N/A	RADIOGRAPHY:	N/A
MATERIAL:	SS316	GASKET:	BUNA

NOTES:

- VESSEL WILL HOUSE (QTY=7) DOUBLE LENGTH BASKET.
- DRY WEIGHT: 573.21 LBS
- SHIPPING WEIGHT: 760 LBS
- FLOODED WEIGHT: 1410 LBS
- VESSEL VOLUME: 12.20 FT³

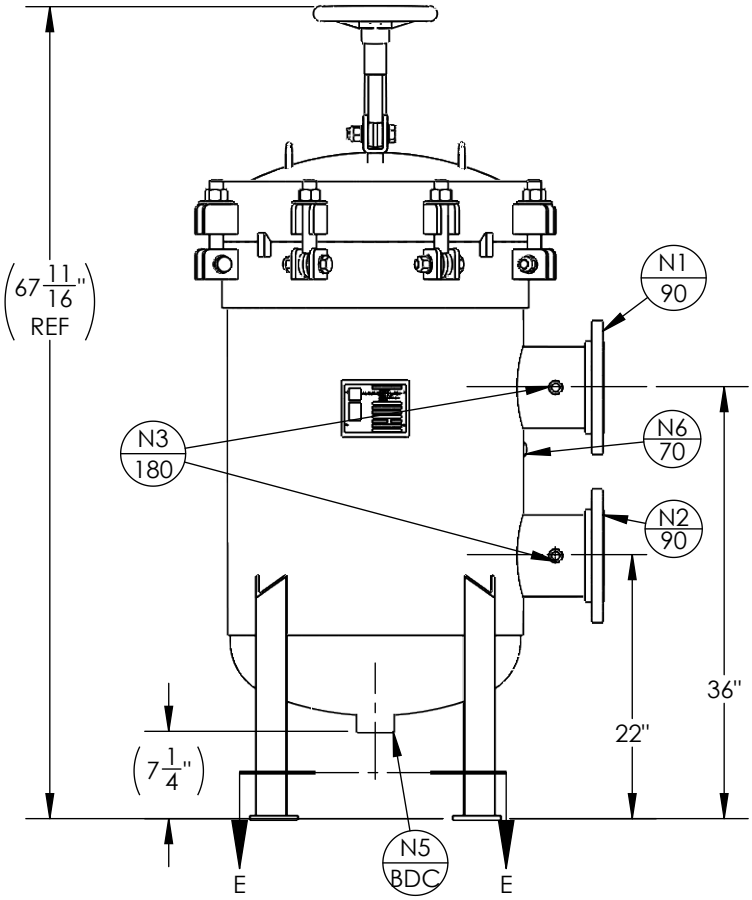

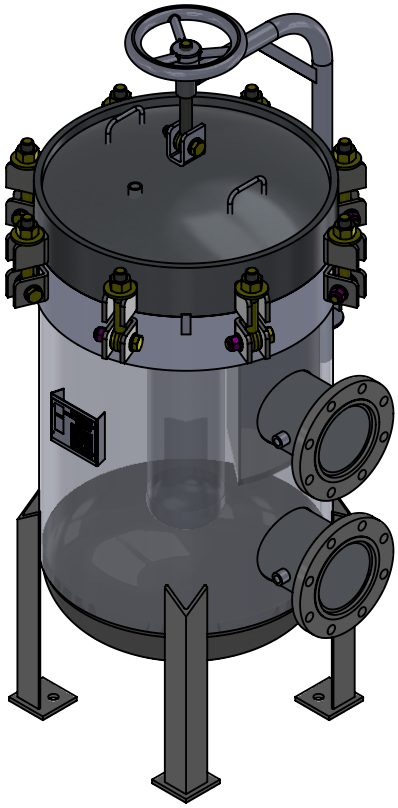

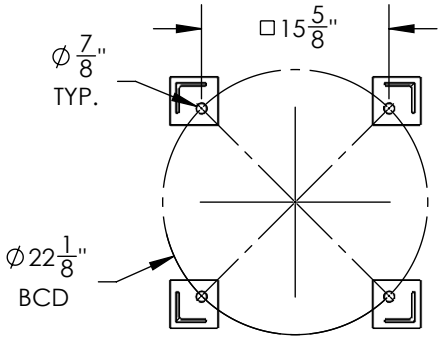

SECTION E-E

APPROVED WITH MARK-UPS ☐ APPROVED ☐

THIRD ANGLE PROJECTION

TOLERANCES-UNLESS OTHERWISE NOTED
DECIMAL .X =±.1" .XX =±.02" .XXX =±.005"
FRACTIONAL =±1/8"
ANGULAR =± 1°
MAX. MACHINED SURFACE FINISH 125

FIL-TREK CORPORATION
55 Stafford Court
Cambridge, Ontario
N1T 1B3
Canada
Phone: (519) 623-7448
Fax: (519) 623-8807
Email: info@fil-trek.com
Website: www.fil-trek.com

EQUIPMENT: LP SERIES (BAG FILTER VESSEL)
MODEL NO: S6LP24-712-6F-DA-150
CUSTOMER:

PARENT: NEW DESIGN	DRAWN: JN	DATE: 14/01/20	SERIAL No.	Part No. 002004-01007	REV. No.
	CHK'D:	SCALE: NTS			0

CARDINAL
Process Technology

Liquid Bag Filtration

Standard Felt Liquid Filter Bag Top Design Elements

Felt Bag Materials

- Constructed of 100% polypropylene, polyester, Nomex®, and Teflon®
- All materials meet FDA regulations for indirect food contact under 21CFR177 (current revision).

The proper combination of fiber diameters, weights and thicknesses result in an economical depth filter media. To reduce fiber migration in critical processes, we offer two optional bag finishes at no additional cost: a glazed (G) finish for polypropylene (PO) bags; a singed (S) finish polyester (PE) and Nomex® (HT) bags.

Micron ratings from 1 to 200

- Available in standard and custom sizes
- High flow/low pressure drop
- Broad chemical compatibility
- Handles standard
- Choice of metallic rings (carbon steel, 304 stainless steel, titanium), polypropylene ring, snap ring,drawstring and a variety of plastic flanges to fit most all commercial housings
- Sewn or Welded Construction
- Non-fiber releasing (with singed or glazed option)

Bag Top Design Elements

Made in the USA

CARDINAL
Process Technology

Liquid Bag Filtration

Standard Felt Liquid Filter Bag Ordering Code

Example Ordering Code	PE - 10 - G2 - S - WE
	1 - 2 - *3 - 4 - 5

1 & 2: Materials of Construction and Micron Rating

Code	Description	Available Microns
PE	Polyester Felt Temp Rating 275 deg F	1, 3, 5, 10, 25, 50, 75, 100, 200
PO	Polypropylene Felt Temp Rating 160 deg F	1, 3, 5, 10, 25, 50, 75, 100, 200
HT	Nomex Felt Temp Rating 425 deg F	1, 5, 10, 25, 50, 75, 100, 200
PEMF	Polyester Microfiber Temp Rating 160 deg F	1, 2, 5, 10, 25, 50 (absolute)
POMF	Polypropylene Microfiber Temp Rating 160 deg F	1, 2, 5, 10, 25, 50 (absolute)
OA	High Capacity Oil Absorbing Temp Rating 160 deg F	1, 2, 5, 10, 25, 50 (absolute)

3: Bag Dimensions / Size

Code	Diameter (in)	Length (in)
1	7.06	16.50
2	7.06	32
3	4.12	8
4	4.12	14
5	4.12	24
7	5.50	15
8	5.50	21
9	5.50	31
11	8.50	16
12	8.50	30
C1	7.31	16.50
C2	7.31	32.50
RP1	8	30
RP2	8	40
U1	9	20 (CUNO)
U2	9	30 (CUNO)
P30	4	10
65	4	23
X1	4.35	8
X2	4.35	14
XO1	6	22
410	4.60	8
420	4.60	18
5GP	5 Gallon Bucket	-

4: Bag Top Design

Code	Description
S	Galvanized Carbon Steel Ring (Handle)
SB	Snap Band (use with C1 and C2) (Handle)
SS	304 Stainless Steel Ring (Handle)
PP	Polypropylene Ring (Handle)
T	Titanium Ring (Handle)
NR	No Ring (Handle)
DS	Drawstring (No Handle)
OSS	Plastic Flange (Rosedale Style)
F	Plastic Flange (FSI Style)
P	Plastic Flange (Universal Style)

Note: Plastic flanges are constructed of a special blend of polyester and polypropylene with a Temp rating of 250 deg F.

5: Bag Construction and Options

Code	Description
NH	No Handle
No Symbol / Blank	Sewn Seam Construction (Standard)
WE	Welded Construction (available for any plastic flange)
EB	Edge Binding*
TTA	Turn, Top Switch, Auto Seam
RC	Reverse Collar
A	Auto Seams
SB	Spun Bond Cover*
MC	150 NMU Mesh Cover*

* Available for bag size 1, 2, 3, 4, 5, 7, 8, 9

* : Bag Finish

Code	Description
P	Plain (PE, PO)
S	Fiber-Free Singed (PE, HT)
G	Fiber-Free Glazed (PO)

Custom bags and additional options available, contact the Filtration Knowledge Center to discuss your requirements.

Made in the USA